WAR DEPARTMENT TECHNICAL MANUAL

TM 11-755

This manual supersedes TB SIG 37, 11 May 1944.

GROUNDS, GROUNDING PROCEDURE, AND PROTECTIVE DEVICES FOR WIRE COMMUNICATION EQUIPMENT

WAR DEPARTMENT • APRIL 1945

RESTRICTED. *DISSEMINATION OF RESTRICTED MATTER.* The information contained in restricted documents and the essential characteristics of restricted material may be given to any person known to be in the service of the United States and to persons of undoubted loyalty and discretion who are cooperating in Government work, but will not be communicated to the public or to the press except by authorized military public relations agencies. (See also par. 23*b*, AR 380–5, 15 Mar 44.)

United States Government Printing Office

Washington : 1945

WAR DEPARTMENT
WASHINGTON 25, D. C. 4 April 1945

TM 11–755, Grounds, Grounding Procedure, and Protective Devices for Wire Communication Equipment, is published for the information and guidance of all concerned.

[AG 300.7 (29 Dec 44)]

BY ORDER OF THE SECRETARY OF WAR:

G. C. MARSHALL
Chief of Staff

OFFICIAL:

J. A. ULIO
Major General
The Adjutant General

DISTRIBUTION:

AAF (5); AGF (5); ASF (2); T of Opn (5); Dept (5); Def Comd (2); Base Comd (5); AAF Comd (2); Arm & Sv Bd (2); S Div ASF (1); Tech Sv (2); SvC (5); Area ASvC (2); WDGS Lib (5); PC&S (2); PE (2); Dep 11 (2); Gen Oversea SOS Dep (Sig Sec) (2); GH (2); M Conc C (2); Air Base Hosp (2); Gen Sv Sch (5); Sp Sv Sch (10); USMA (2); ROTC (5); Lab 11 (2); Sig AS (2); Rep Shop 11 (2); A (5); D (2); R 7, 17, 44 (2); Bn 6, 7, 11, 17, 18, 44, 55 (2); C 11 (5); AF (2); S (2); T/O & E: 11–500, Sig Sv Orgn—Teams CA, CB, EF, GF, GI, GJ, GK, GN, GO, GP, GU, GV, HF, HQ, HH, II (2).

Refer to FM 21–6 for explanation of distribution formula.

LL.113

TM 11-755
1945

CONTENTS

		Paragraph	Page
PART ONE.	**GENERAL**		
Section I.	Purpose	1	1
II.	Characteristics of Grounds	2–13	1
III.	Installation of Grounds	14–31	11
IV.	Types of Soil and Requirements	32–40	27
V.	Maintenance and Testing of Grounds	41–50	32
VI.	Other Grounding Mediums	51–53	40
PART TWO.	**PROTECTIVE DEVICES**		
Section VII.	Description and Use	54–65	42
VIII.	Maintenance of Protective Devices	66	56
Index			57

M558636

This manual supersedes TB SIG 37, 11 May 1944

PART ONE

GENERAL

Section I. PURPOSE

1. General

This Technical Manual presents basic principles of grounds, grounding procedure, and protective devices for wire communication equipment. Although all wire communication equipment does not use a ground return circuit, almost all such equipment should have a protective ground and protective devices to prevent damage to equipment and personnel who install, operate, and maintain it. This manual, written with a minimum of technical language and mathematical relationship, is detailed and broad enough to serve communication personnel as a reference. For specific instructions regarding the grounding or protective devices of a particular piece of apparatus, see the Technical Manual covering the equipment.

Section II. CHARACTERISTICS OF GROUNDS

2. Definitions

a. GROUNDS OR GROUND CONNECTIONS. Connections to the earth, called grounds or ground connections, are made to driven rods, pipes of a buried water system, buried plates, or buried wire. When pipe systems are not available, rods are usually driven. The earth is used as a ground-return talking circuit, and, to a great extent, as a part of the electric circuit in telegraphy. In telephone communication systems use of a circuit ground introduces noise in the circuits and causes crosstalk. However, it is used as an equipment ground in such systems to drain off static disturbances and for ringing purposes.

b. GROUND RESISTANCE. Ground resistance is the electrical resistance to the current flow between the equipment and the earth. When two or

more ground rods are connected in parallel, ground resistance is the combined resistance of the group considered as a single ground. The total resistance of any ground return circuit is the sum of the ground resistance of each of the two ground stations involved. The specific resistance of the earth is very high compared to that of a metallic conductor, but the cross-sectional area of the path is large. Therefore, the resistance between any two ground rods is relatively low if a good connection is obtained. The greatest ground resistance is near the electrode. (See fig. 1.)

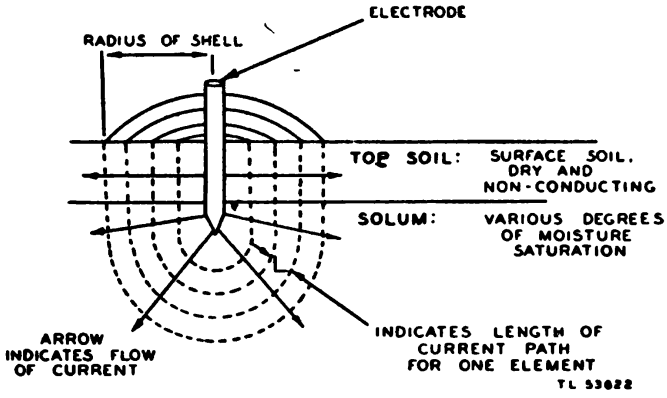

Figure 1. Soil hemisphere.

c. COMPONENTS OF GROUND RESISTANCE. Any form of ground connection can be broken down as follows:

(1) The resistance of the ground wire and its connection to the ground electrode.

(2) The resistance of the electrode itself.

(3) The resistance of the contact between the electrode and the soil.

(4) The resistance of the soil.

Note. The resistances of the ground wire and the electrode are negligible in comparison with the total resistance.

d. VARIANCE OF RESISTANCE. Resistances of ground connections vary from a fraction of an ohm to several thousand ohms depending upon—

(1) The nature of the soil..

(2) The moisture content of the soil.

(3) The physical dimensions of the connections.

(4) The material of the connection.

(5) The effects of past corrosion and electrolytic action.

3. Results of Poor Grounds

The range of operation for wire communication depends upon line conditions, and ground resistance is a highly important part of variable line conditions. High ground resistance reduces operating range. Serious crosstalk may result even to the extent of transmission and reception becoming totally unsatisfactory if ground resistance is too high in cases of equipment using a number of circuits.

4. Obtaining Minimum Resistance

Factors to be considered in obtaining minimum ground resistance are—

a. Use of existing low-resistance ground connections.
b. The shape and size of the ground rods.
c. The selection of proper locations for ground rods.
d. The proper way in which to drive ground rods.

5. Resistivity Variation with Moisture Content

Table I shows the variation of resistivity with moisture content for two samples of soil. These samples of soil, when thoroughly dried, became good insulators, with resistivity in excess of 10^9 ohms per centimeter cube. The resistivity changed rapidly when the soil contained 30 percent mois-

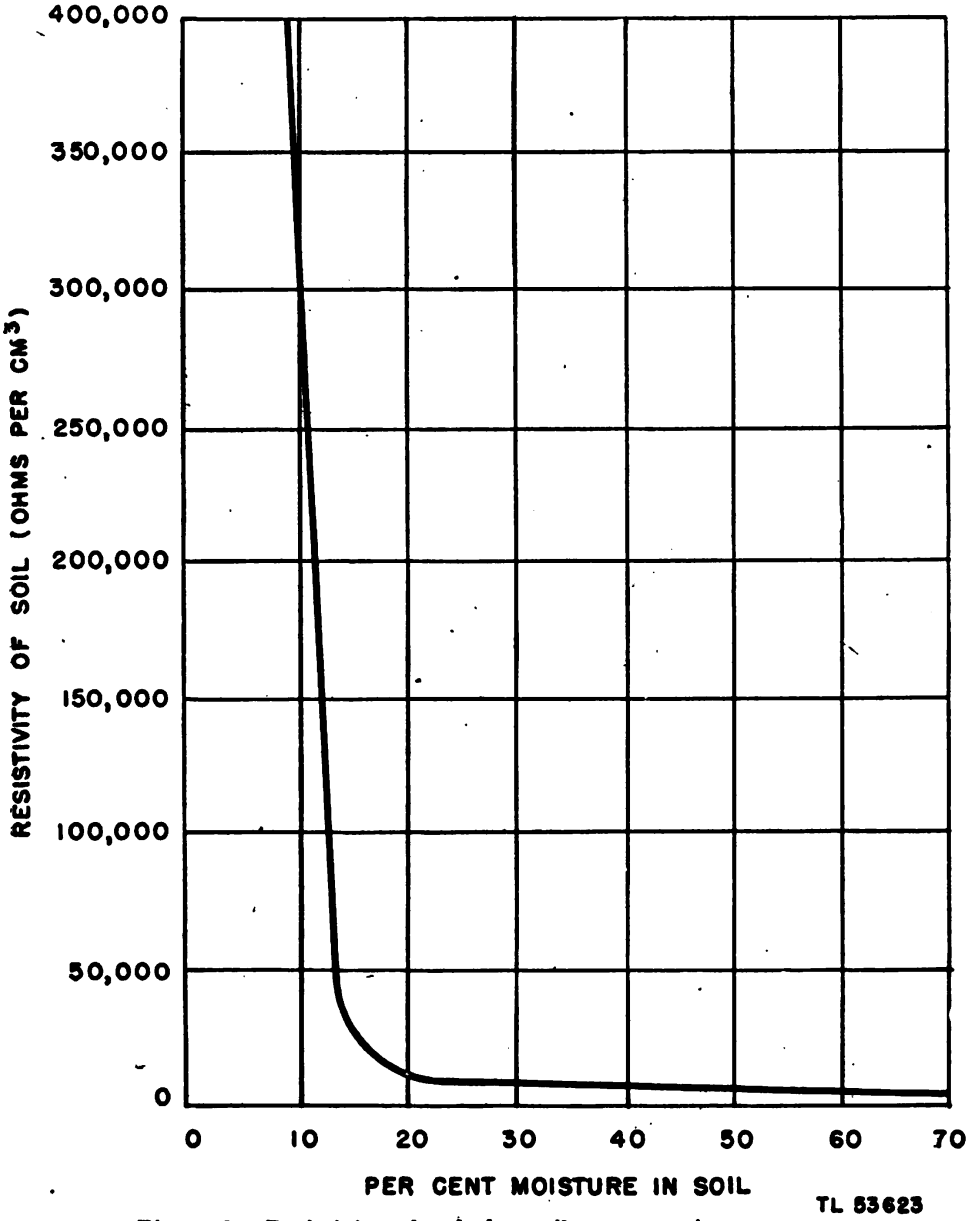

Figure 2. Resistivity of red clay soil versus moisture content.

ture; a resistivity of one sample is 6,400 ohms per centimeter cube and that of the other 4,200 ohms. Data for red clay soil are shown in figure 2. The resistivity of the soil is also influenced by temperature.

Table I. Effect of moisture content on the resistivity of soil

Moisture content (percent by weight)	Resistivity (ohms per cm cube)	
	Top soil	Sandy loam
0	Over one billion	Over one billion
2.5	250,000	150,000
5	165,000	43,000
10	53,000	18,500
15	19,000	10,500
20	12,000	6,300
30	6,400	4,200

a. Table II shows the resistivity of sandy loam containing 15.2 percent moisture with temperature changes from 20° C to —15° C. In this range, the resistivity varies from 7,200 to 330,000 ohms per centimeter cube. Figure 3 shows the variation of resistivity of red clay soil containing 18.6

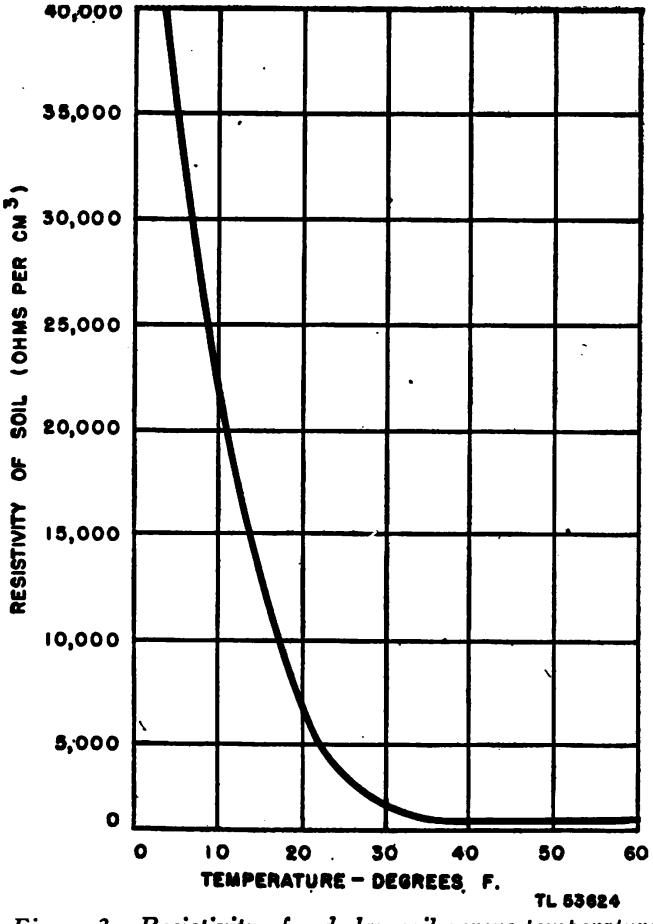

Figure 3. Resistivity of red clay soil versus temperature.

percent moisture. From 5° F to 30° F, the resistivity changed from 35,000 to 1,000 ohms per centimeter cube. With both samples of soil, a pronounced change in resistivity is noted below the freezing point.

Table II. Effect of temperature on resistivity of soil
(Sandy loam of 15.2 percent moisture)

Temperature		Resistivity (ohms per cm cube)
C	F	
20	68	7,200
10	50	9,900
0 (water)	32	13,800
0 (ice)	32	30,000
—5	32	79,000
—15	5	330,000

Because the resistivity of the soil is dependent upon moisture content and temperature, the resistance of any earth connection may vary considerably throughout the different seasons of the year. (See fig. 4.) As both temperature and moisture content become more stable at greater distances below the surface of the earth, a ground connection, to be permanent, should be made with the electrodes well below the ground surface and preferably with the grounding electrode in the permanent moisture level.

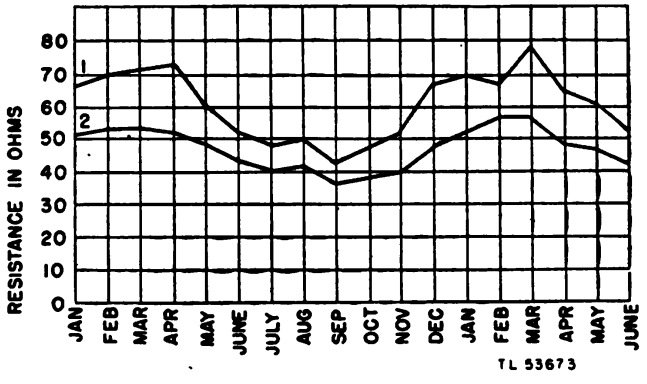

1. Average of eight ¾-inch standard pipes, depth 3 feet.
2. Average of eight ¾-inch standard pipes, depth 10 feet.

Figure 4. Variation of electrical resistance of pipe grounds with seasons.

b. Soil resistivity sometimes varies greatly from one point to another in the same vicinity. Figure 5 shows measured values of the ground resistance from 5 ohms to 600 ohms over a short distance. Such variations are common in glaciated areas where there are different types of soil. In districts of this type it is impossible to estimate the ground resistance at one point from measurements made at nearby points. A great variation in soil resistivity at different depths below the earth's surface are ac-

counted for by differences in soil composition at different layers, differences in moisture content, and temperature.

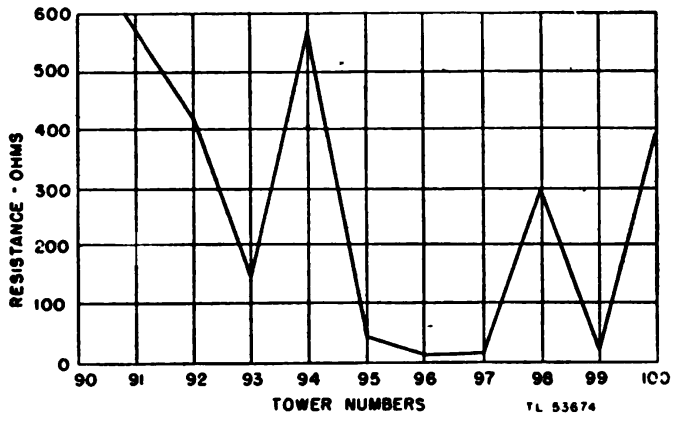

Figure 5. Variation of resistivity at different points in the same vicinity.

c. Differences of soil resistivity with depth are shown in figures 6 and 7. These are plots of the ground resistance of a 5/8-inch diameter rod driven into the ground, measurements being taken as the depth of the rod is increased. Different soil strata are indicated by the slopes of the resistance line. In some locations the resistivity of the earth is so high that low-resistance grounding connections are possible only at the expense

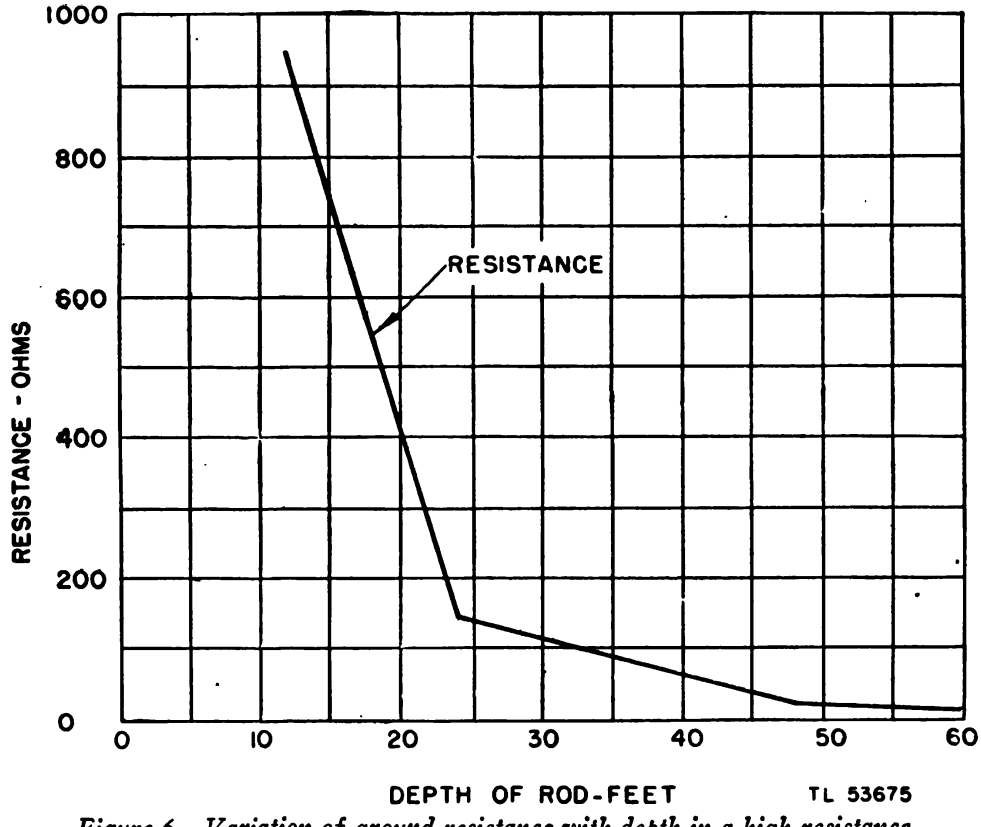

Figure 6. Variation of ground resistance with depth in a high-resistance ground area.

necessary for the installation of elaborate electrode systems. It is often economical to use an electrode system of limited size and to reduce the ground resistivity by increasing the soluble chemical content of the soil by applying salt water near the electrodes.

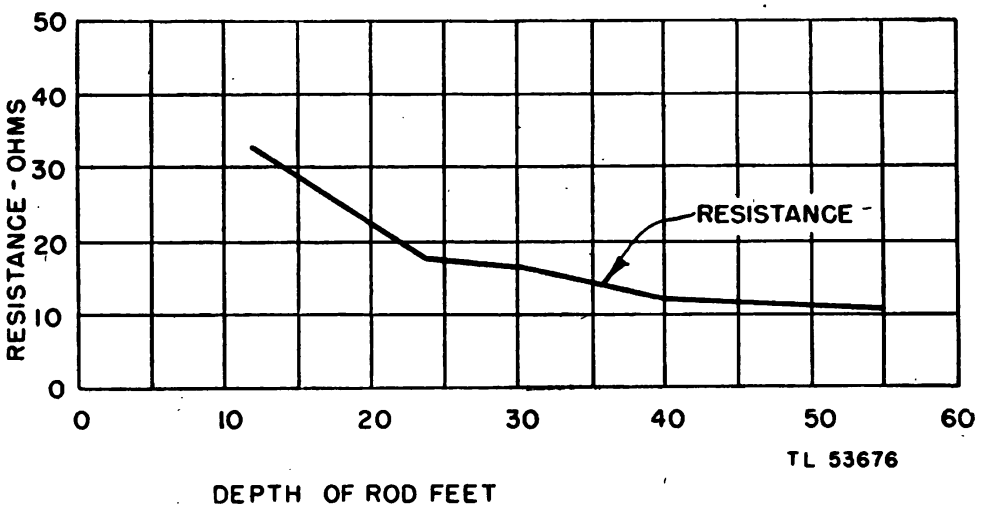

Figure 7. Variation of ground resistance with depth in a low-resistance ground area.

d. Table III and figure 8 show the great reduction in resistivity of sandy loams and red clay, respectively, brought about by increasing the salt content. Adding salt equivalent to 20 percent of the weight of the moisture content reduced the resistivity of sandy loam by a factor of 100 to 1. Salted soil is also subject to considerable variation of resistivity with variations in temperature.

Table III. Effect of salt content on resistivity of soil
(Sandy loam, moisture content 15 percent by weight; temperature 17° C)

Added salt (percent by weight of moisture)	Resistivity (ohms per cm cube)
0	10,700
0.1	1,800
1.0	400
5	190
10	130
20	100

e. Table IV shows a resistance variation of from 110 ohms per centimeter cube at 20° C to 1,440 ohms per centimeter cube at —13° C. The rise in resistivity at temperatures below freezing is not nearly so great as that in untreated soil. As salt is readily soluble in water, the salt content of a soil will change as the salt is carried away by rain and snow. Figure 9 shows the change in the resistance of a ground connection subjected to a series of tests, and how the resistance dropped suddenly after salt treat-

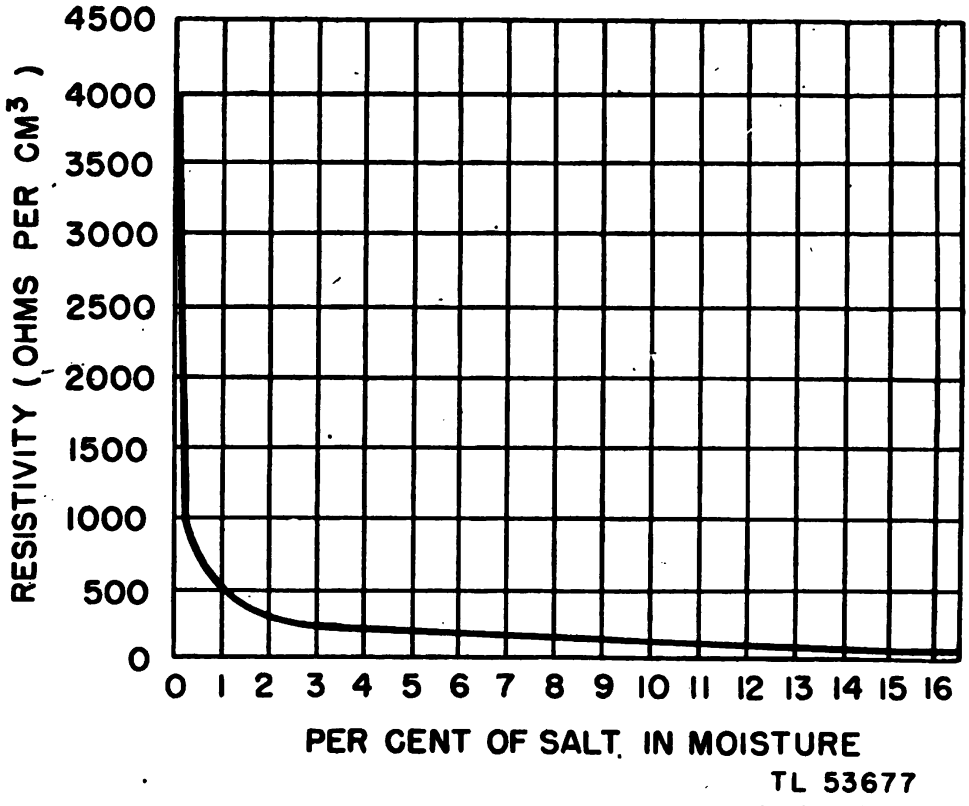

Figure 8. Variation in resistance with change in salt content of soil moisture.

ment. Although it is not shown by the graph, the resistance rose gradually to about 25 percent of its original value at the end of about 18 months. At that time the soil was given a second treatment and the resistance again dropped. If the soil treatment is employed, it is beter to use electrodes of a material unaffected by salt. (See par. 29.)

Table IV. Effect of temperature on resistivity of soil containing salt
(Sandy loam, 20 percent moisture; salt 5 percent of weight of moisture)

Temperature		Resistivity (ohms per cm cube)
C	F	
20	68	110
10	50	142
0	32	190
—5	23	312
—13	8.6	1,440

6. Requirements of Satisfactory Ground Connection

Electrodes buried in the ground to form an electrical connection to the earth must involve good electrical conductors, be capable of withstanding mechanical abrasion, and provide a sufficient area in contact with the soil so that the resistance of the current path into and through the earth will

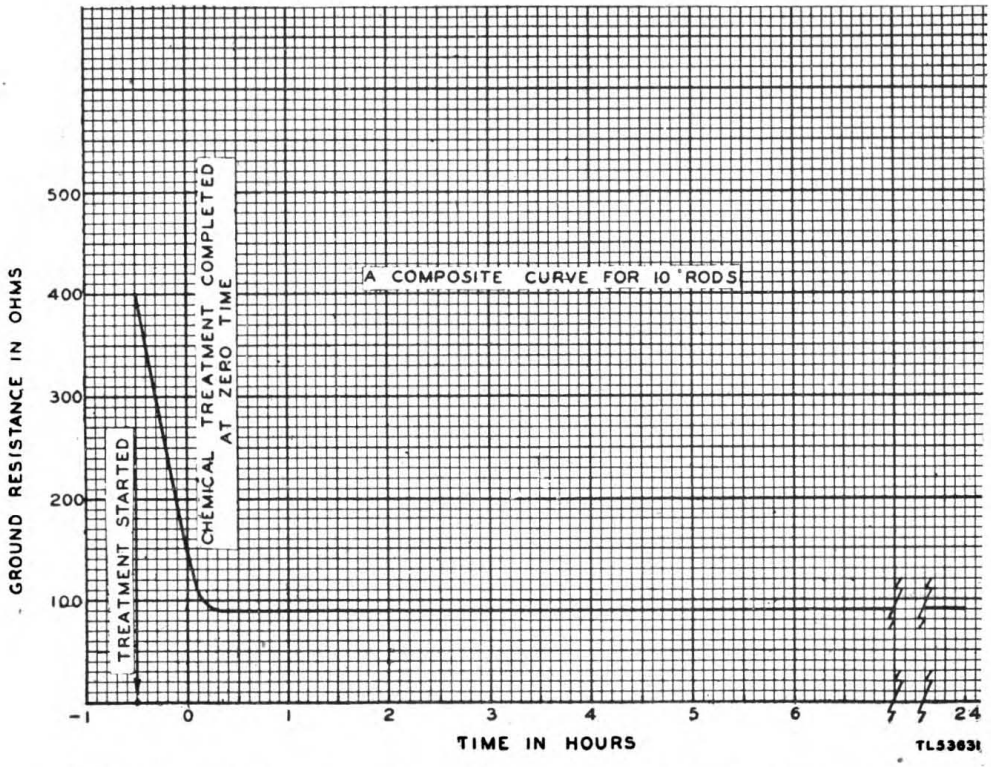

Figure 9. Resistance variation with time; single rod chemically treated, a composite curve for 10 rods.

be within the allowable limits. The resistance of this earth path must remain reasonably constant, and relatively unaffected by current flow resulting from the expected performance of the electrical circuit to which connection is made. If the resistance of the electrode itself is neglected, the resistance of the earth connection will be that offered to the current flow through the soil immediately around the electrode. Therefore, it is necessary to investigate the values of soil resistivity to be encountered.

7. Ground Connections of Low Resistance

The objective in applying any grounding technique is to have the ground terminals of the equipment at the same potential as that of the earth. Any resistance present in the ground circuit will result in a difference of potential.

8. Multi-purpose Ground Connections

Ground connections are required for the protection of lines, equipment, and personnel, for radio interference suppression and for ground-return circuits. For all these applications, a low-resistance, low-impedance ground is not only desirable but in most cases essential. A ground lead conductor, with a cross-section large enough to carry the current likely to flow, should be provided. In protective grounding, the ground lead used should offer low impedance to high-frequency currents and be short,

direct, and free from turns. The same ground installation should not be used for both ground-return circuits and for radio interference suppression. It is best to use a separate ground rod to protect each of a group of equipments, filters, frames, etc. It generally will be found that the requirements for each application will dictate separate ground connections.

9. Location Choice

The type of equipment often dictates the general location of a ground, but at times there is an opportunity to shift locations to take advantage of favorable grounding conditions. In the case of lightning arrester grounds, however, choice of location is restricted by the necessity of short conductors. When making surveys for relay protector grounds, note the condition and nature of the soil and the presence of nearby streams to furnish permanent moisture to the soil. Always locate grounds for these protectors at sufficient distances from power supply system grounds to minimize resistance coupling between the two.

10. Burying a Bare Wire

Where it is difficult to drive rods and where space permits, an effective ground often can be obtained by burying a bare wire in a shallow trench for a few hundred feet. If more than one wire is used, the trenches should be at right angles or at a separation of not less than 10 feet.

11. Common Grounds

Grounds may be required at a particular location for more than one purpose, such as protection of communication equipment, a-c power supply ground, cable ground, and equipment ground. For protection reasons, it is best to connect all grounds to a common point particularly when lightning is prevalent. This prevents successive potential differences when one of the grounds is carrying large currents, as may happen in an electrical storm. Such potential differences, unless avoided, may cause insulation failures and danger to personnel. For a similar reason, it is advantageous from a protection standpoint to interconnect grounds of different communication systems installed at one point. In some cases where the resistance of the ground is high, it may be necessary to use separate equipment grounds to avoid transmission difficulties; however, wherever practicable use a single low-resistance ground.

12. Grounding of Lead-cable Sheath

Sheaths of lead cables ordinarily should be grounded where they terminate in switchboards. Sheaths of underground and aerial cable should be bonded where both are used. Sheaths of aerial cable should be electrically continuous from end to end to prevent large differences of potential, which would otherwise occur at sheath discontinuities during lightning storms.

13. Mechanical Construction of Grounds

Flattening one end of a pipe to a chisel shape when it is used as a ground rod will help in easy penetration of the soil into which a rod is to be driven. This also will aid in preventing damage to the threads when several lengths of pipe are driven into the earth to serve as a ground rod. Usually a hammer or a mallet is sufficient in driving long pipes, but when difficulty is experienced a form of driving tool, such as a pneumatic hammer or an improvised pile driver, will reduce the effort involved. In the case of extra long pipes, they generally are driven in 10-foot sections until the top of each section is nearly flush with the surface of the earth. At this point an additional section is coupled on and the process repeated until a sufficient depth has been reached. Connection to the pipe is made by means of a suitable clamp, such as one to which a length of copper connecting wire has been sweated. The part of the pipe to which the clamp is fastened is cleansed with sandpaper or a file. To prevent corrosion, a thin coating of petrolatum should be applied after the clamp is bolted on.

Section III. INSTALLATION OF GROUNDS

14. Types of Ground Connections

The best ground is a buried water pipe or other metallic body with a large area of contact with the earth. Since such grounds are not always readily located in connection with military operations, it is necessary to resort to the use of ground rods.

15. Installation Factors

Limitations in area, available equipment, and time govern installation of ground connections in military operations, so that the subject of grounds, grounding procedure, and protective devices is not treated here with the detail that is found in commercial publications where the chief considerations are permanency of arrangement and sufficient area. However, the basic principles can be adapted for military use. Just placing a ground rod anywhere so long as it is driven into the earth does not suffice to bring about an efficient ground. The type of soil into which the ground rod is placed, plus other considerations, must be surveyed. The lowest point of land or spot where drainage or moisture collects should be chosen. The best site is one where there is clay or loamy soil and where moist soil usually is found. It may be necessary to use several hundred feet of lead wire to reach the location considered best. The resistance of such lengths of lead wire are negligible in most instances.

16. Danger of Lightning Damage to Equipment

Loops in conductors or ground connections cause excessive inductance which results in impedance to the flow of electricity from lightning shock to ground. (See fig. 10.) When lightning is impeded in its flow from the equipment to ground, the lightning will take a parallel path to ground. This parallel path may be anything which will act as a better conductor, for example, a man standing near a tree during an electrical storm. Lightning hits the tree which because of its composition is of high resistance. The lightning takes off on a parallel line through the man standing near the tree. Because of the impedance offered by the trunk of the tree, the man furnishes a path of less resistance to ground and the lightning takes this path. Sharp turns in the conductor to a ground rod also cause impedance, but a complete loop is far more serious. A sharp turn or a loop may cause impedance enough so that the path of least resistance may be the one back to the equipment, possibly through a metal table upon which the equipment has been placed. The result, when this occurs, is generally complete ruin of the equipment.

17. Differences in Circuit Grounds and Protective Grounds

a. A circuit ground is one used as a return path of a circuit such as a teletypewriter circuit. Such a ground must not have too high a resistance if there is to be proper operation of the equipment.

b. Protective grounds are those grounds placed on a piece of equipment for its protection against high surges of current from lightning or nearby power lines. Because of the quantity of electricity which such grounds may have to carry, it is evident that they must be better grounds than ordinarily are used for merely grounding a circuit for proper action of relays, etc. The common telephone on a desk which uses both types of ground is a typical example. There are two leads to the phone, the ring conductor and the tip conductor. The ring is connected in the central office to the negative side of a 48-volt battery. The tip of this two-pair conductor is terminated in a ground which also acts as a circuit ground. Thus, if the resistance between the negative side of the battery and the ground of the tip side of the telephone conductor is low enough to permit the completion of the circuit between these two grounds, the circuit is adequate to carry the current resulting from the 48-volt central office battery and the ground is proper for use as a circuit ground. However, it can be seen that this ground cannot, at the same time, be utilized to carry off a charge of lightning or even one from a high-tension line. Therefore, a protective ground is necessary. One end of such a ground on this equipment is located at the telephone and the other end at the central office. The protective ground at the end where the instrument is located is taken off the protector located just outside the building where a drop wire from a telephone pole is connected to a protector block. This ground conductor is usually a No. 10 or No. 12 rubber-insulated

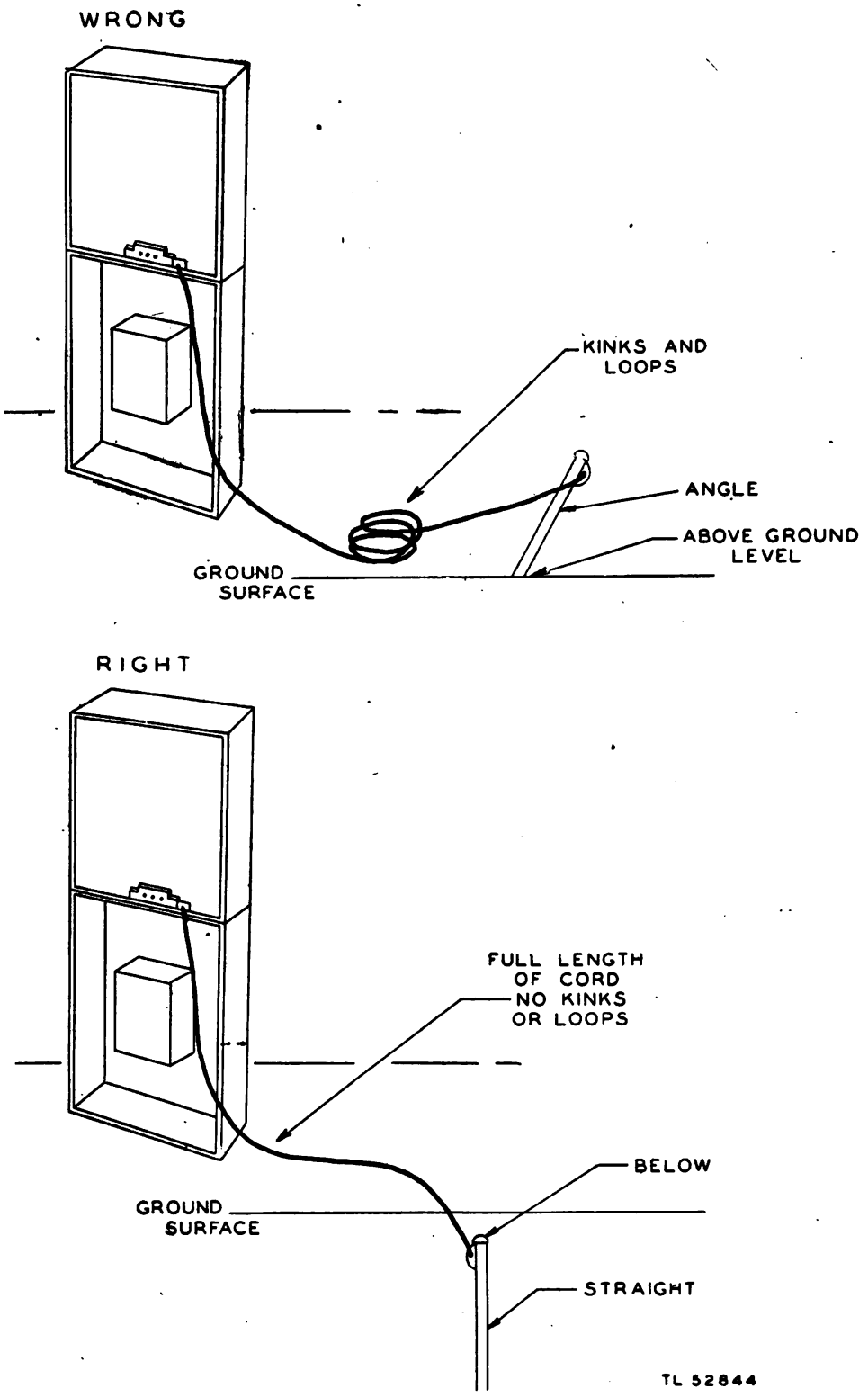

Figure 10. Wrong way and right way to connect a protective ground.

copper wire and runs to a rod driven into the ground. However, in better telephone practice, this wire is connected to a cold water pipe in the building where the telephone is installed.

c. The cold water pipe is preferred to a hot water pipe because the electrical distance from it to actual ground is shorter. A hot water pipe often goes through a piece of heating apparatus and this increases resistance. At the central office end of the telephone circuit, the protective ground is taken off the main frame. The main frame ground is one of the best types in a telephone system. A rubber-insulated ground wire is used instead of bare wire because the insulation forms a high resistance to parallel paths for current flow if the system receives a high surge of power current or lightning, and thus prevents such current from taking an alternate route to ground.

d. The No. 10 or No. 12 wire connected from the protector to the ground rod furnishes much less resistance to a surge of power current or one caused by lightning than the telephone lines from the protector to the instrument itself. They are much smaller than the ground connector and therefore present higher resistance.

18. Connecting Conductor to Ground Rod

There are three ways to connect to the ground rod. One is by use of the terminal screw, another is by use of the ground clamp, and the third is by use of the wrap method.

a. Terminal Screw. The terminal screw is probably the best method by which to make the connection, because invariably the screw is an integral part of the rod. This assures good conductivity between the grounding conductor and the rod.

b. Ground Clamp. Usually a ground clamp is an adjustable strap of metal, often galvanized iron, designed to fit tightly over a ground rod. Generally, the strap contains a number of holes for adjustment, and it is so constructed mechanically that the end of the lead wire to be connected to the rod can be securely tightened against the rod. Some clamps have a stiff spring loop into which the lead wire is clamped. Tests have proven that the greatest insecurity in a ground connection is the connection between a rod terminal and the lead wire. Clamps are either jarred loose or are broken during driving and are not as efficient as terminal screws that are integral parts of rods. Also, a screw driver or pliers is usually necessary for the adjustment of the clamps, and if these tools are not available it may be impossible to make the proper connection.

c. Wrap Method. In the wrap method of making a ground connection, No. 10 or No. 12 telephone wire is wrapped around a ground rod. There should be a number of turns, as many as a dozen, wrapped around the rod and then soldered securely to the rod. This usually necessitates the use of a blowtorch or a similar device with which the rod can be heated to a temperature which will enable soldering the wire to the rod without getting a cold or resin-soldered joint.

19. Driving Ground Rods

The efficiency of any type of ground rod is seriously interfered with unless it has been cleaned of paint and grease. The manner in which ground rods are driven has a very direct bearing on how efficiently they function. Using a light driving hammer, strike the head of the rod no harder than necessary to penetrate the ground. The lighter the driving blows, the less likelihood there will be of the ground rods whipping and the more solid will be the contact between the soil and the rods. The following steps are outlined to follow when driving ground rods:

a. Scoop out a small hole about 6 inches deep in the lowest, dampest location in the vicinity where the ground rod is to be driven.

b. Drive the rod in the hole until the top of the rod is about 3 inches above the bottom of the hole. (See fig. 11.)

c. Clamp a lead wire securely to the rod. Saturate the earth around the rod with water and fill in the hole with excavated earth, covering the top of the rod. Keep the earth around the rod moist by frequent applications of water, unless it is apparent that there is sufficient moisture in the earth to render this unnecessary.

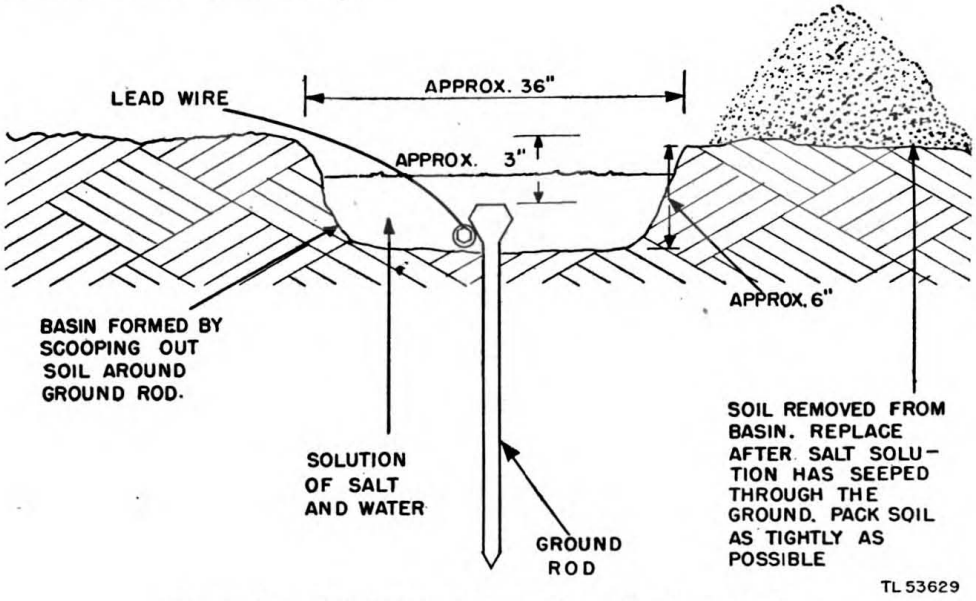

Figure 11. Artificial treatment of a ground connection.

20. Rods with Chuck Anvils

A modification of the sledging process of driving ground rods has been developed which consists of a chuck and sliding hammer. (See fig. 12.) The advantage gained by using this device is that the work may be carried on at a level convenient to the workman without a ladder or auxiliary platform, and in addition, blows are delivered to the rod at a point not far from the ground line. By this system, rods can be driven to considerably greater depth than is possible by hand sledging. Jointed rods (fig. 13) may be extended to a considerable depth. In the example of the joined rod shown in figure 13, a removable stud bolt takes the driving blow. As

the sections are driven, the rods, threaded at both ends, are connected by bronze couplings into a continuous conductor. A gasoline or an air hammer provides a very effective tool for installing ground rods. These hammers are available in several sizes. As the units are self-contained, they may be readily carried about.

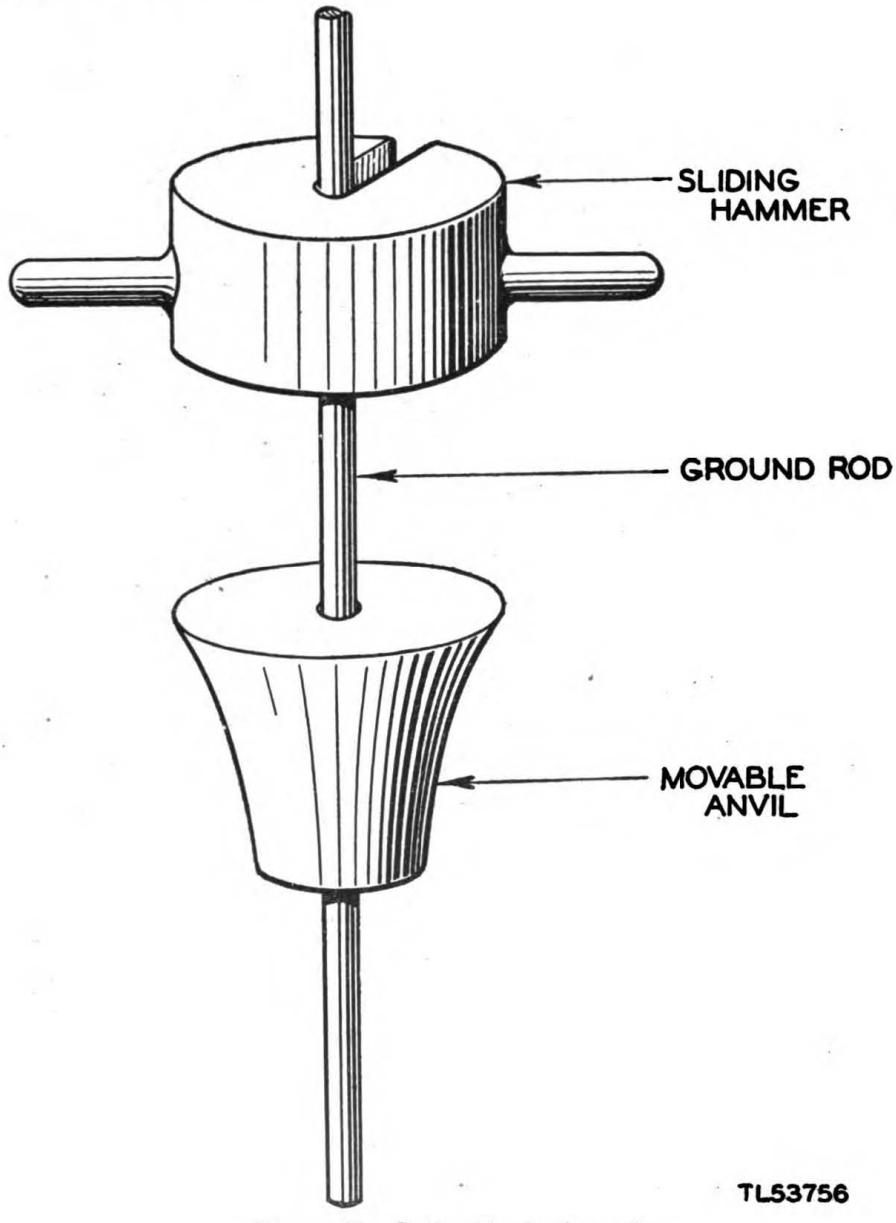

Figure 12. Rod with chuck anvil.

21. Obtaining Maximum Conducting Earth Shell

When the top of a driven ground is 3 inches below the ground level, the maximum conducting earth shell is obtained at that particular location, and ground resistance is lowest. The advantage is more marked in soils of high resistivity where a larger earth shell is needed for lower resistance values. The common practice of driving a ground rod down to the lead

wire clamp and leaving the remaining portion of the rod exposed above the ground unnecessarily limits the minimum ground resistance which might otherwise be obtained. Figure 14 shows graphically the resistance for the various positions of a partially and fully driven ground rod.

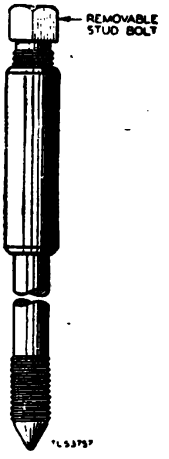

Figure 13. Jointed rod for deep driving.

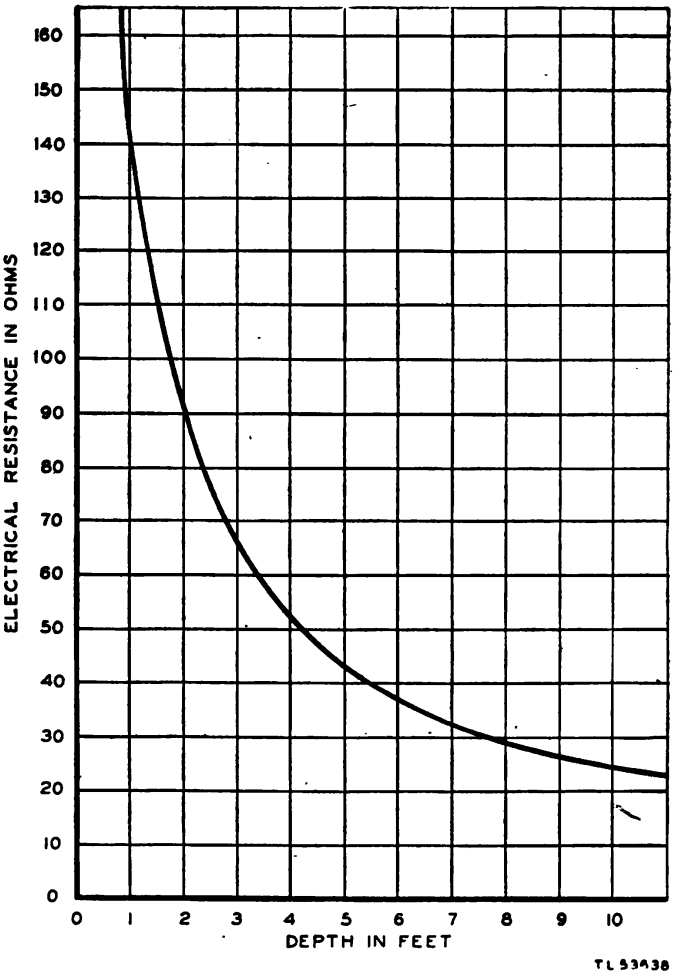

Figure 14. Variation of resistance with depth of driven ¾-inch pipe in fairly wet soil.

22. Parallel Rods

If the driving of a single ground rod will not produce satisfactory low resistance, additional rods, arranged in parallel, may be driven which will give desired results. Spacing between the adjacent rods should not be less than 10 feet.

23. Resistance Gradient for Rods in Parallel

When the resistance of a single driven ground rod proves too high, the simplest expedient is to drive additional ground rods and connect them in parallel. The effectiveness of this method is illustrated in figures 15 to

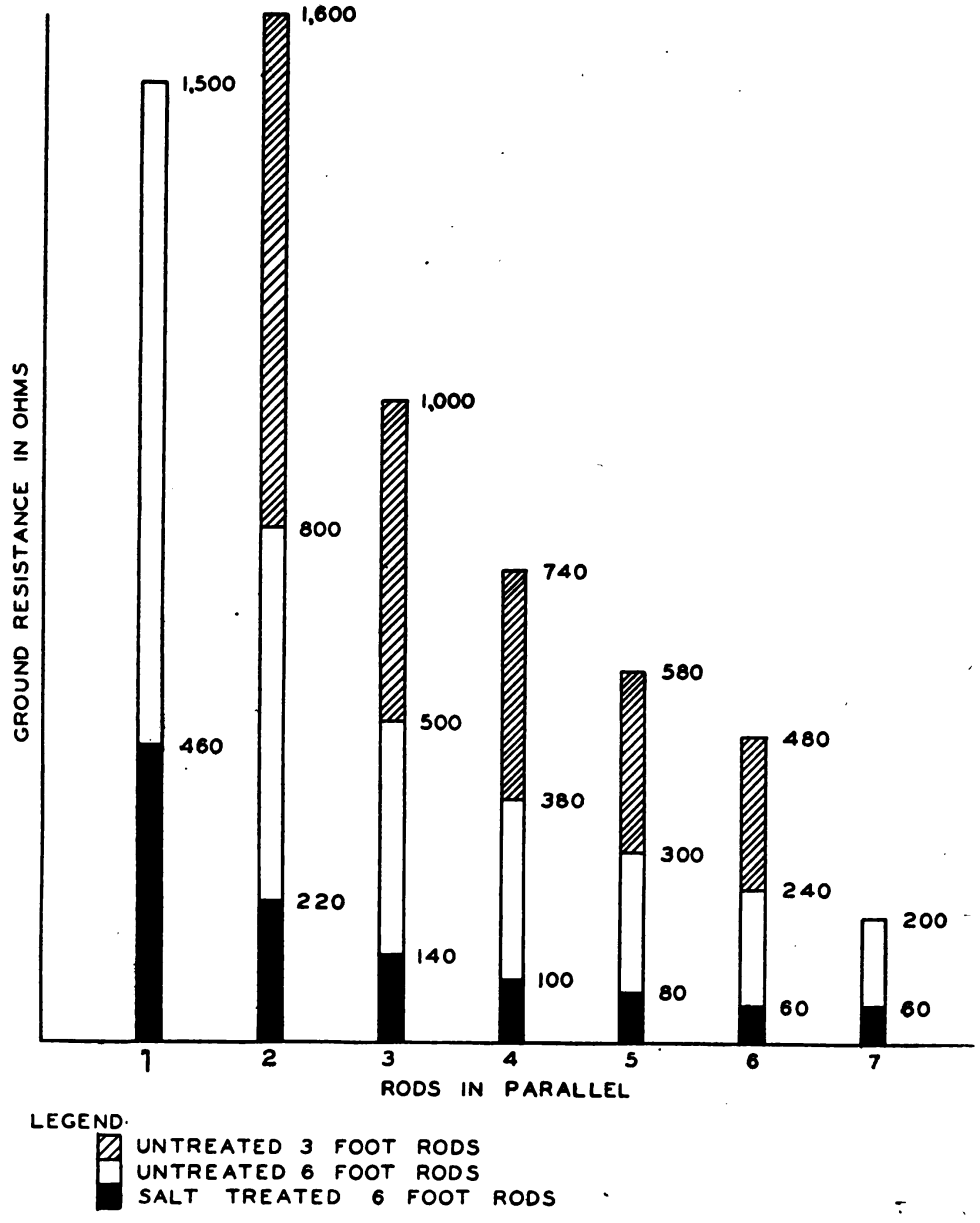

Figure 15. Variation of resistance with number of parallel rods in wooded area (sandy soil).

19. When a certain number of ground rods have been driven, no further reduction in ground resistance is obtained by driving more. Note that the combined resistance of driven rods in parallel does not always follow the mathematical relation of pure resistance in parallel. This is due to earth shells overlapping somewhat, and also to the fact that no two grounds driven in the same locality have the same value of resistance.

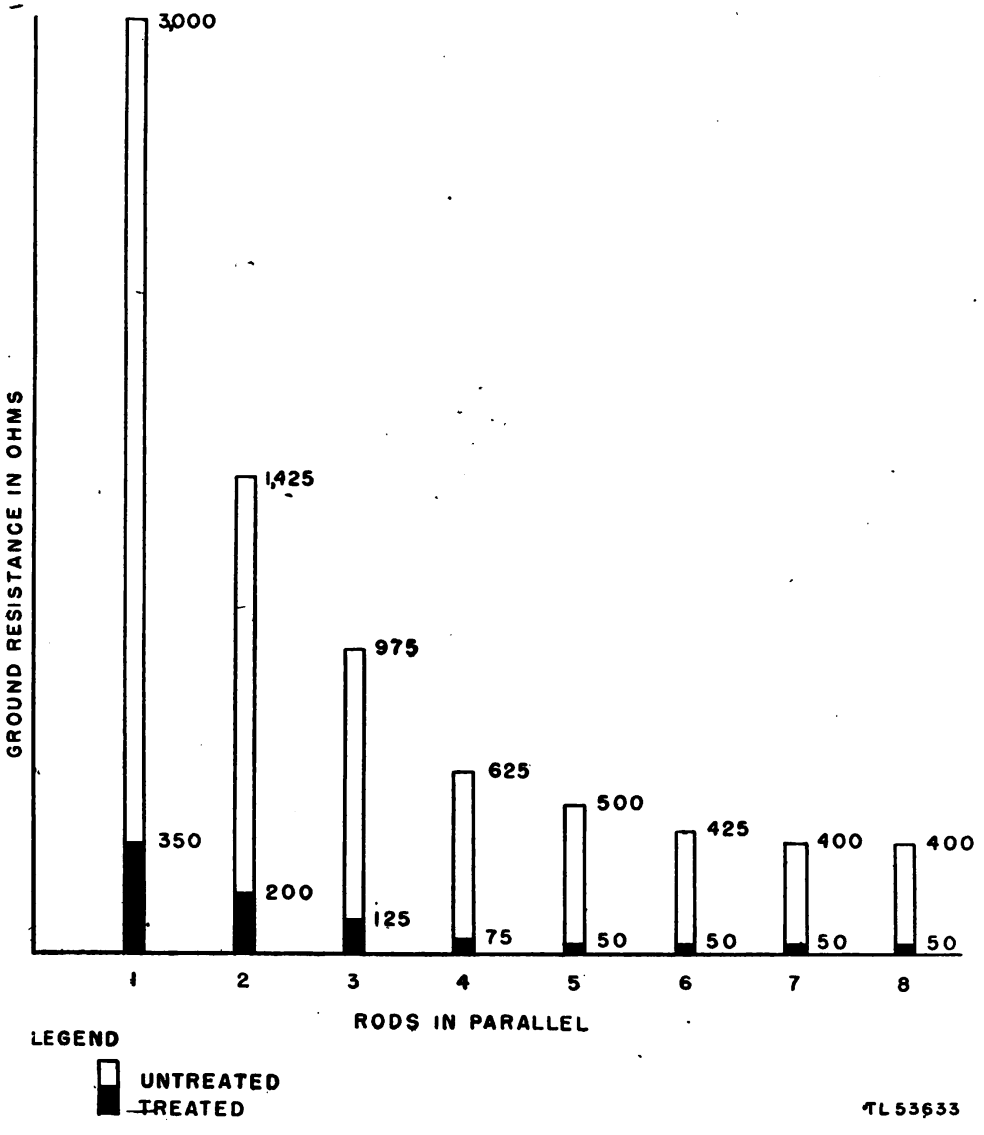

Figure 16. Variation of resistance with number of parallel rods in sandy soil.

24. Spacing Parallel Grounds

Figure 20 shows the composite curve for the resistance of two ground rods connected in parallel but spaced at various distances. Practically the same curve was obtained for 3-foot and 6-foot rods. Though the exact amount of separation is not critical, the minimum distance of 10 feet is considered advisable in separating 3- or 6-foot grounds when they are con-

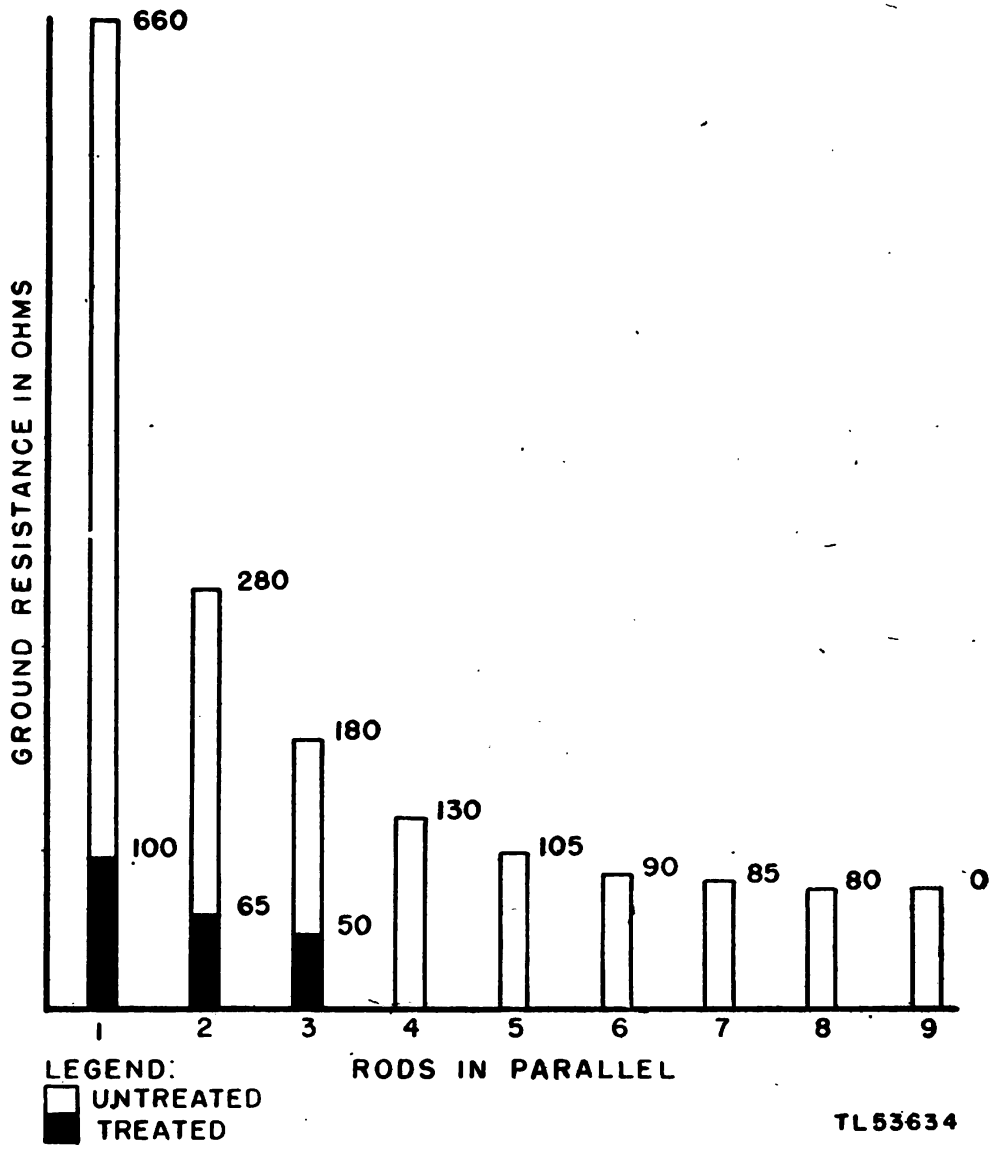

Figure 17. Variation of resistance with number of parallel rods in loamy, sandy soil.

nected in parallel. To determine the proper distances to space rods connected in parallel, the combined resistance of two rods connected in parallel is measured when spaced at distances of 0.5, 1, 3, 5, 7, 9, 12, 15, 18, 21, and 24 feet in various types of soil. The shortest distance at which the lowest resistance is obtained indicates the correct spacing of ground rods when connected in parallel.

25. Earth Potentials

As a general rule, a potential exists between any two ground rods placed some distance apart. This potential in most cases will be fluctuating. It originates from various natural and artificial currents flowing in the earth and is attributable to power systems, street railway systems, Aurora

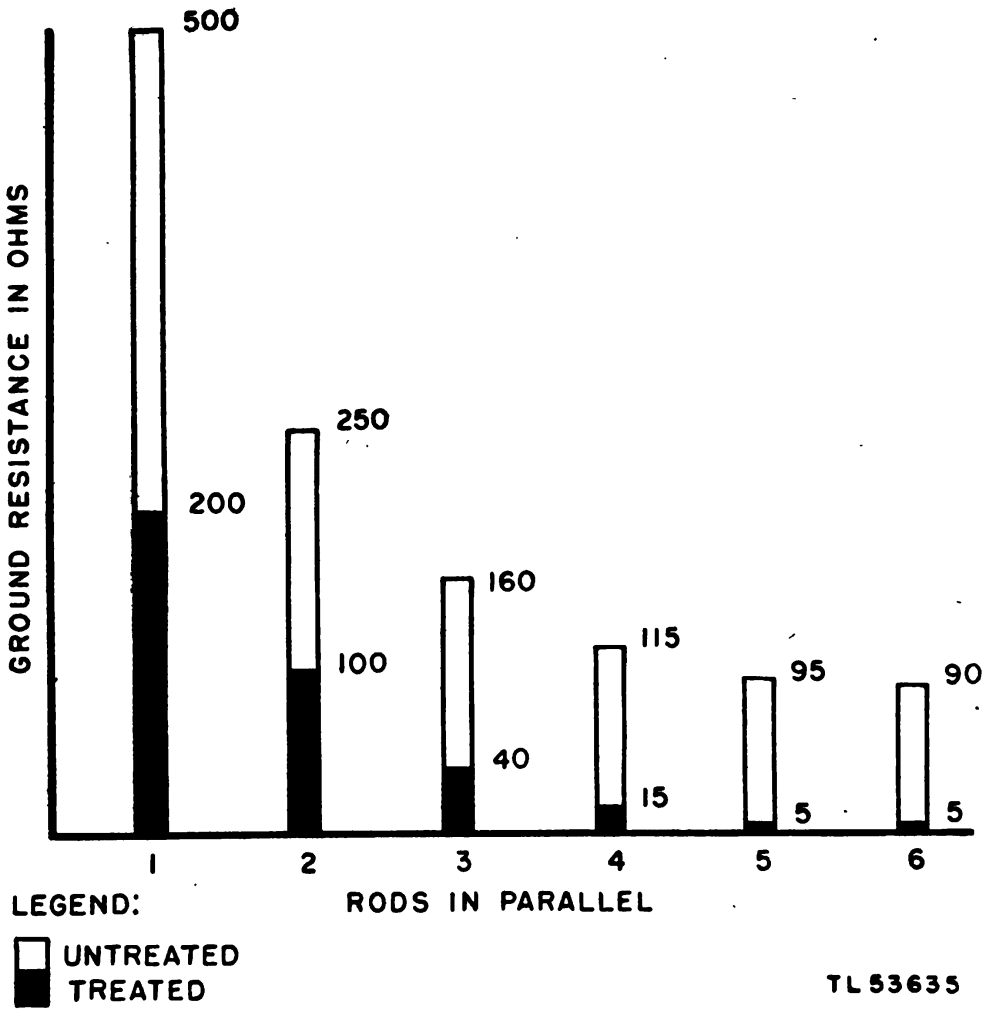

Figure 18. Variation of resistance with number of parallel rods in sandy loam.

Borealis, sun spots, lightning, etc. This is particularly true in cases of long commercial lines.

26. Contact Resistance

The resistance introduced by contact between the ground electrode and the soil is generally negligible for those metals commonly used for ground rods. However, rods should be free and clear of all paint and grease no matter what their composition. Likewise tests have shown that rust on the surface of a ground electrode plays but a small part in increasing contact resistance. Rust is ferric oxide (Fe_2O_3) and is permeable to water, hence it is of no greater resistivity than soils.

27. Rods Below Frost Levels

If soil selected for ground connection is frozen, its resistance is extremely high. Steps must be taken to overcome this condition. In temperatures where the soil is frozen part of the time, the ground rods must be located

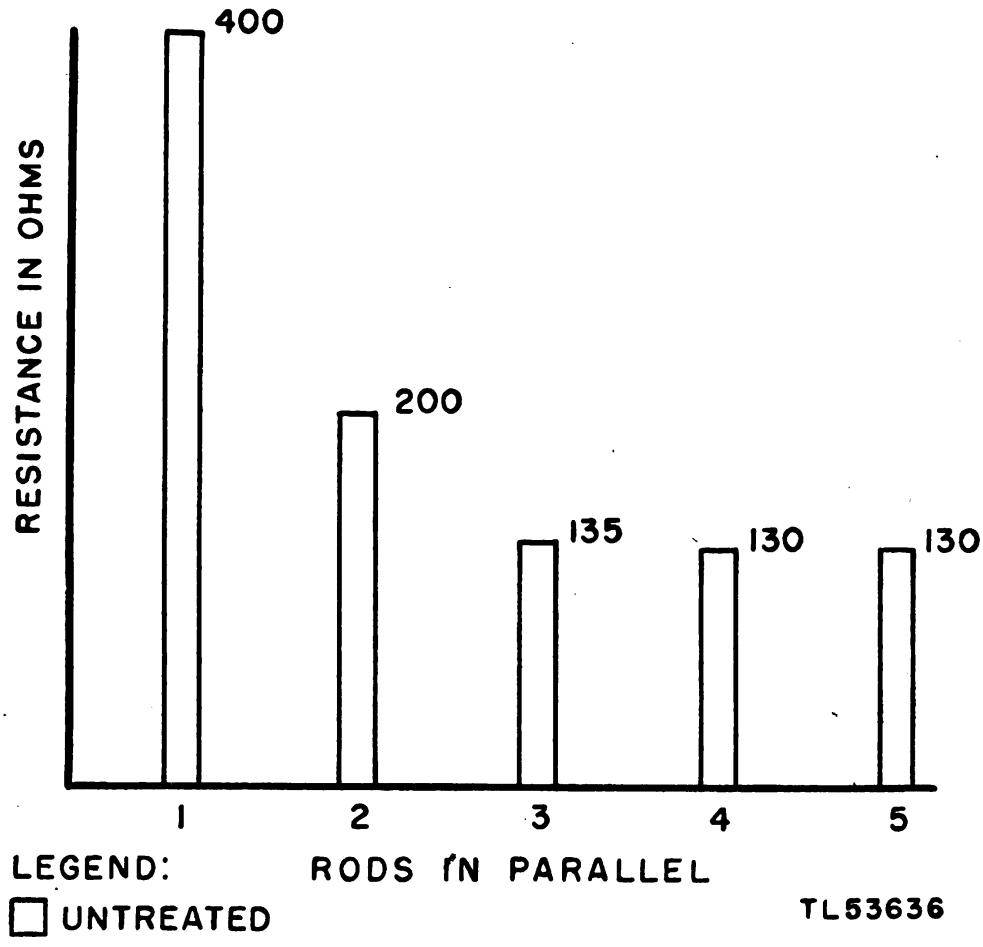

Figure 19. Variation of resistance with number of parallel rods in clay soil.

below the frost level. In case it is impossible to drive a long rod to a sufficient depth to obtain a good connection, a recommended procedure is as follows:

a. Dig or blast a hole below the frost level.

b. Drive a rod in the hole until the top of the rod is approximately 3 inches above the bottom of the hole. (See fig. 11.)

c. Clamp the lead wire securely to the rod and refill the hole immediately with excavated earth or other insulating material to prevent the soil around the rod from freezing.

28. Multiple Rods

Tests and measurements prove that 90 percent of the total potential drop around a ground rod generally occurs within 6 to 10 feet of the rod, depending upon the length of the rod and the nature of the soil. It may then be considered that the effective electrode consists of a volume of the earth surrounding the rod. When paralleling two or more rods together, it is desirable to space them so that the effective electrodes do not overlap to any appreciable extent. In general, 5-foot rods should be spaced no

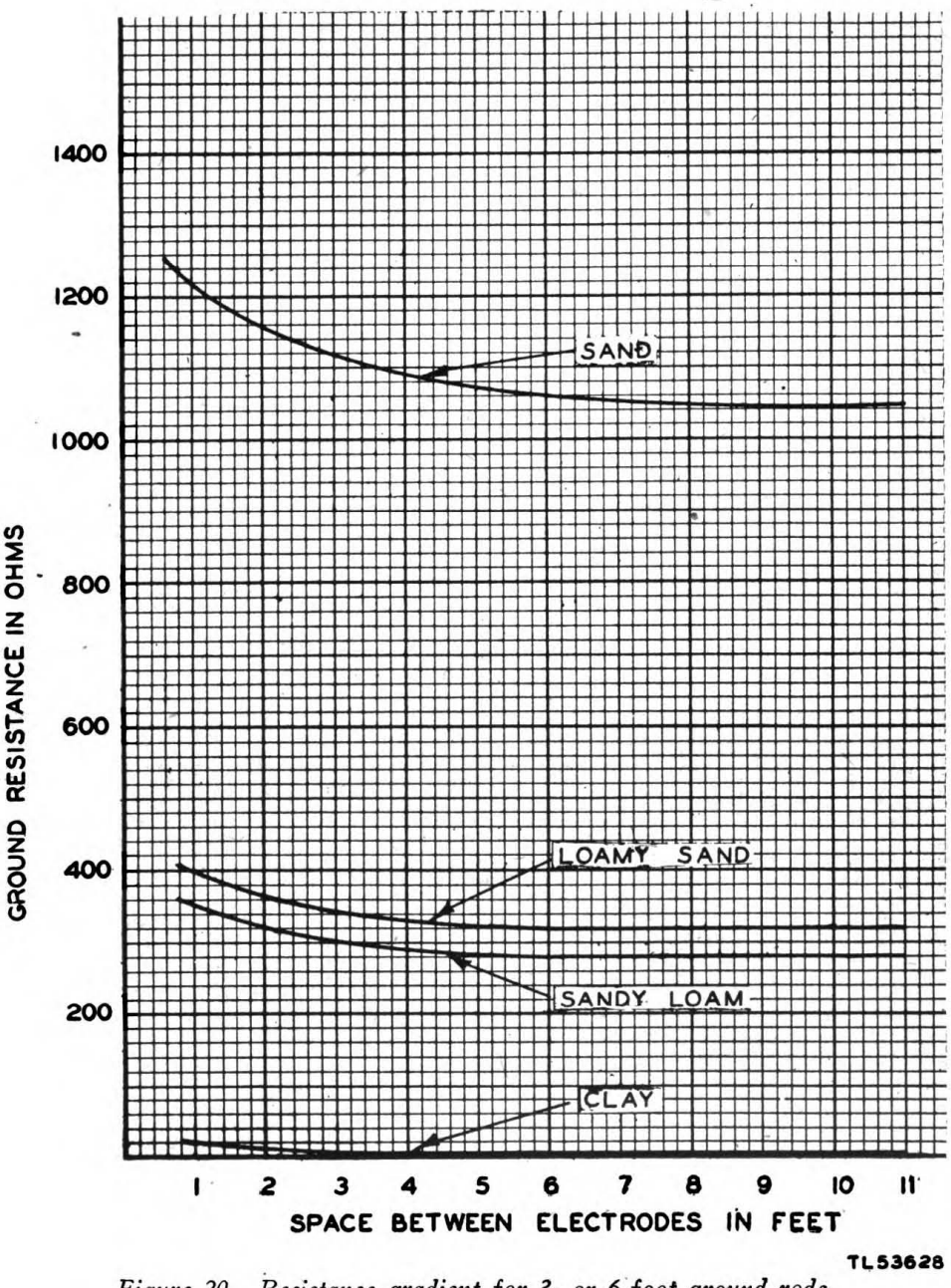

Figure 20. Resistance gradient for 3- or 6-foot ground rods.

closer than 10 feet apart. Longer rods should have spacing at least as great as their length. Even with this spacing, the actual resistance of a parallel combination will be higher than that computed from their separate resistances. In general, the greatest benefit is obtained from paralleling grounds when the specific resistance of the soil is high.

29. Electrode Material

The main consideration, when choosing material for electrodes, is to pick a type which resists corrosion best. Copper-clad rods are probably least subject to corrosion, although iron, plain and galvanized, is used exten-

sively and gives good service. The iron oxide which forms on plain iron rods is not considered detrimental because its conductivity is better than that of the surrounding soil.

30. Types of Ground Rods

Various types of ground connections in common use include driven pipes and rods, plates, strips, patented devices, and existing water pipes. The lowest ground resistance is provided by the water pipe and the most convenient ground connections. The pipe-shaped electrode is the simplest type to install and lends itself easily to repeated use. Because of its low-cost construction, it is in common commercial use and is readily available.

31. Properties of Ground Rods

The diameter of a ground rod should be determined solely by weight limitations and by required stiffness for driving in hard-packed soil. Figure 21 shows that little advantage is gained in lowering ground resistance by

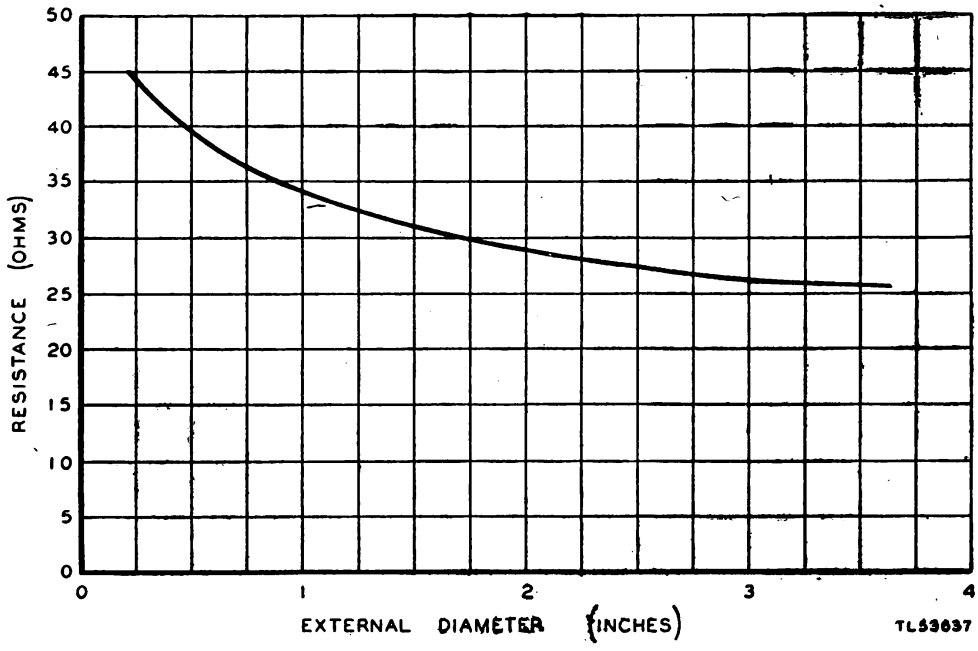

Figure 21. Variation of electrical resistance with diameter of electrode driven to a depth of 10 feet in fairly wet soil.

increasing the diameter of the rod. Figure 22 shows that ground resistance obtained is inversely proportional to the lengths of the ground rods. Therefore, the rod should be as long as possible without requiring special driving equipment. The best length is 6 feet. The rod should be easy to drive and to recover without bending. The greater the diameter of the rod, the harder it is to drive; also, it is more difficult to recover without bending. A thin rod is easy to drive and to recover, but bends easily when driven into hard-packed soils. Stiffness depends upon the diameter-to-

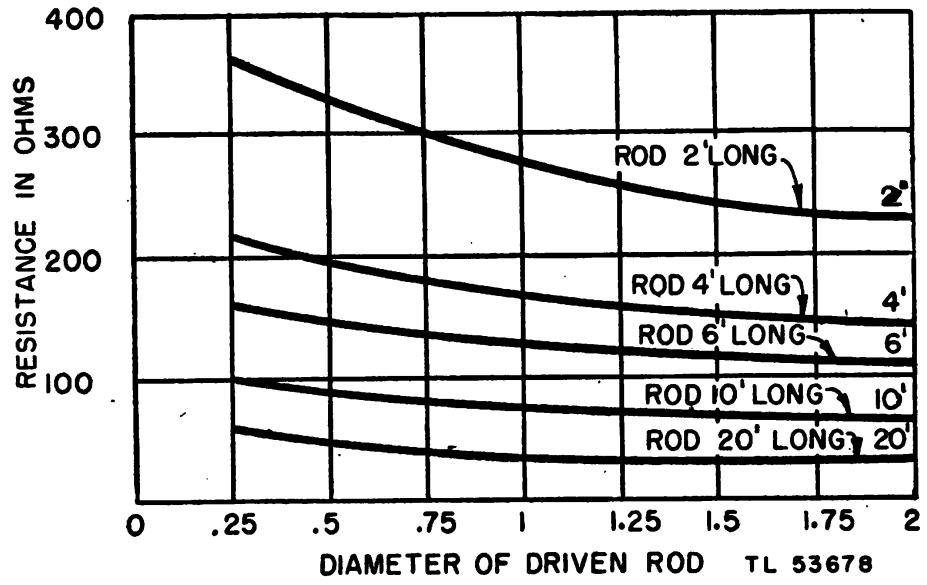

Figure 22. Slight variation of resistance with diameter of driven rods.

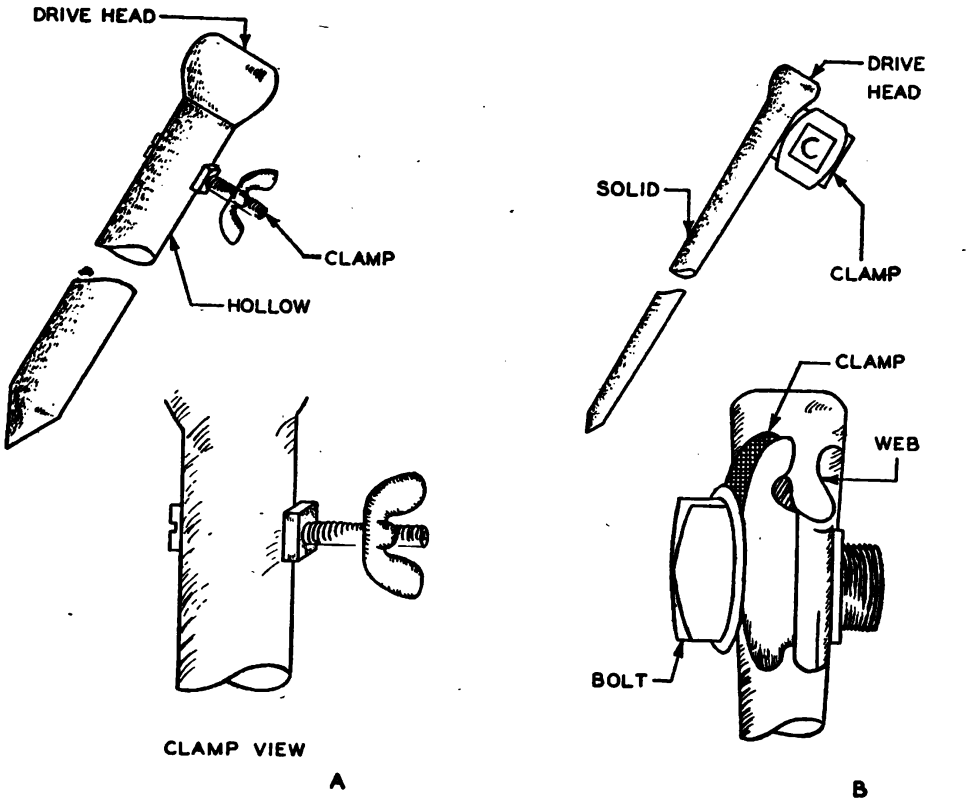

GROUND ROD GP-29

LENGTH = 3 FEET
DIAMETER = 1.315 INCHES
WEIGHT = 8 1/4 LBS.

HUBBARD DRIVE HEAD GROUND ROD

LENGTH = 6 FEET
DIAMETER = 3/4 INCHES
WEIGHT = 10 LBS.

Figure 23. Two types of ground rods. TL53639

length ratio. For a 6-foot rod, a ¾-inch solid diameter provides the proper stiffness. Care should be taken to avoid use of rods with flimsy bolt and wingnut connections which frequently bend or shear off in transportation or while the rod is being driven. The type of ground rod shown in figure 23(B) has been found to have most of the desirable properties required for military use. Its ¾-inch solid rod diameter makes the rod easy to drive and recover; yet it is stiff enough to resist bending. Although it is 6 feet long, its weight is only slightly more than that of some

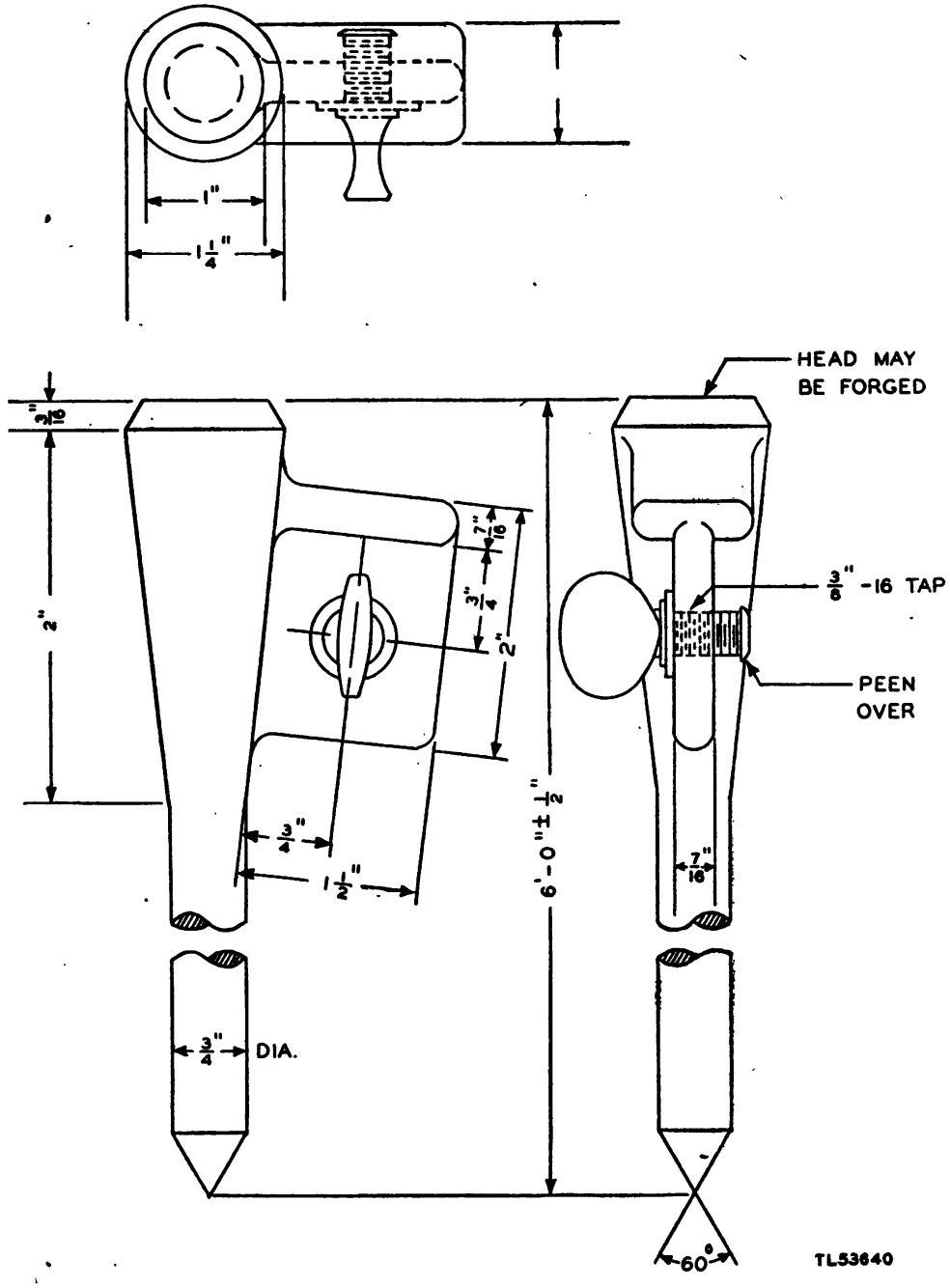

Figure 24. Ground Rod MX-148/G.

3-foot ground rods. The principal advantages of this type of rod lie in its integral drive head and lead wire clamp. The husky bolt is protected from blows by the heavy webbing, and because it is integral with the rod it cannot be lost or misplaced. The large head on the bolt makes it possible to tighten the lead wire in place by hand. As the result of tests, many of the features of this rod were incorporated in a developed ground rod shown in figure 24. Increased protection to the bolt by a T-shaped web has been provided and the bolt has been staked so that it cannot be removed. This type of ground rod is recommended for military use.

Section IV. TYPES OF SOIL AND REQUIREMENTS

32. Soil Conditions

The presence of moisture is a governing factor in determining that an area of soil is advantageous for good grounding, but there are other factors highly important. Among these are the concentration of salts dissolved in this moisture, temperature, seasonal variances in certain areas, and reaction of the soil to chemical treatment. Specific resistance varies greatly per centimeter cube. The following list arranges soils of various types in order of ascending specific resistance:

a. Wet soil.
b. Clay or loam.
c. Clay or loam with sand and gravel.
d. Wet sand.
e. Dry sand.
f. Gravel and stones.

33. Soil Factors Affecting Resistance

The fact that variation in resistivity of soils of different textures and compositions is from a few hundred ohms to several thousand ohms per cubic centimeter is due to electrochemical action in the soil. The particular ingredients of a soil and the electrolytes formed by moisture combining with soluble acids, alkalies, and salts determine its resistivity.

a. Soil Strata. Figure 1 shows two layers of soil that usually are found together. The top soil, invariably rich in minerals, is likewise usually dry and, therefore, relatively nonconducting. Generally, the thickness of the top soil varies from 0 to about 6 inches. The true soil (called the solum) underlies the top soil and, although usually moist, often does not contain enough conducting material to make it a good conductor.

b. Soil Classification. There are so many kinds of soil that it is difficult to classify them. However, certain recognizable types reveal definite trends in resistivity. Hasty inspections often will allow rough classi-

fication of the soil into one of the types listed below with average resistances as determined by the Bureau of Standards:

Type of soil	Resistance in ohms of ground connection (one 5-foot rod, ⅝-inch diameter)		
	Avg	Min	Max
Fills, ashes, cinders, brine waste.....	14	3	41
Clay, shale, gumbo, loam.....	24	2	98
Clay, shale, gumbo, loam with varying proportions of sand and gravel.....	93	6	8,000
Gravel, sand, stones with little clay or loam	554	35	2,700

c. Soil Tests. Figures 15 to 19 show the probable range of ground resistance to be expected in various types of soil. For soils of high resistivity a minimum value of ground resistance is approached beyond which nothing can be done to further minimize ground resistance. For soils of low resistivity it is comparatively easy to obtain very low ground resistance.

34. Effect of Moisture

Figure 2 shows a typical curve depicting the effect of moisture upon soil resistivity. The moisture content is expressed in percent by weight of dry soil. Resistivity increases very abruptly with a slight decrease in moisture content below 22 percent. This indicates the critical difference that a small percentage of moisture makes in the value of ground resistance. Moisture alone, however, is not the predominant factor in the low resistivity of soils. As an example, a ground rod may be driven into the bed of a mountain stream and may present a very high ground resistance if the water is relatively pure and the soil does not contain conducting elements. It has been estimated that as high as 90 percent of the total electrical resistance of the soil lies within an area of soil 6 to 10 feet around an electrode. Conducting ingredients in the soil have an important bearing on the type and amount of soil resistance. Another important factor is the temperature of the soil. The temperature effect, however, is negligible when the temperature is above freezing, but when it drops below freezing, the resistance is greatly increased.

35. Treating Soil Artificially

It does not always follow that installation of multiple electrodes will provide an adequate low resistance to earth. Very frequently, in installations involving soil of high resistivity, a number of electrodes fail to provide resistance low enough for most efficient operation of the equipment. Generally, it is possible to reduce the resistivity of the soil immediately surrounding the electrodes by treating the soil with a substance which, when

in solution, is highly conductive. There are several such substances, but the better known, in order of preference, are:

a. Sodium chloride (NaCl) (common salt).

b. Calcium chloride ($CaCl_2$).

c. Copper sulphate ($CuSO_4$) (blue vitriol).

d. Magnesium sulphate ($MgSO_4$) (epsom salts).

e. Potassium nitrate (KNO_3) (saltpeter).

Caution: Whenever chemical treatments of the earth are resorted to, be careful that the substances do not get into nearby drinking water supplies.

The amount of salt required depends upon the type of soil, the moisture content of the soil, and the length of the electrode. It is possible to predetermine the amount of treatment considered adequate for most soil conditions because these values are not critical within certain limits.

36. Chemical Treatment

Large reductions in resistance of individual electrodes may be expected after chemical treatment where low resistances are difficult to obtain without treatment. Percentage reductions are generally larger with higher value of electrode resistances. The initial effectiveness of chemical treatment is greatest where the soil is somewhat porous, allowing the solution to permeate a considerable volume of earth and thereby increase the effective size of the electrode. When soils of compact textures are encountered, the chemical treatment is not as effective at first because the solution tends to remain in its original location for a longer period of time. Chemical treatment limits the seasonal variation of resistance and lowers the freezing point of the surrounding soil. The latter may prove advantageous in colder climates where otherwise a great depth would have to be reached in order to prevent the soil around the electrodes from freezing. After treating several ground rods, a method illustrated in figure 11 was evolved as follows:

a. Dig a 1-foot basin with a radius of approximately 1½ feet around the driven ground rod.

b. Make a solution of salt and water.

c. Flood the basin with solution.

d. In ½ hour, fill the basin with soil, covering the ground rod. The basin should be filled so that soil will pack as tightly as possible. In the beginning, a few rods were treated by pouring salt into the basin and then flooding the basin. The water seeped so fast that lumps of salt were left behind. Mixing the salt in solution before pouring it in the basin eliminates this condition, and assures a more even distribution of the solution through the conducting shell of earth. The amount of salt to be used to treat a single driven ground rod must always depend on the available supply. The results of this test show that at least 5 pounds of salt and 12 quarts of water are required to give a substantial decrease in resistance. (See fig. 25.) The addition of more water will

bring a greater effective decrease in ground resistance. Additional water not only dissolves the salt, but aids in carrying the salt solution throughout the conducting shell. Therefore, a minimum treatment per ground rod would contain at least 5 pounds of salt and as much water as is required to flood the basin. The rate at which chemical treatment will lower the resistivity of the soil is dependent upon the rate at which the solution will seep through the soil. Commercial tests show that an initial chemical treatment retains its effectiveness for at least a year;

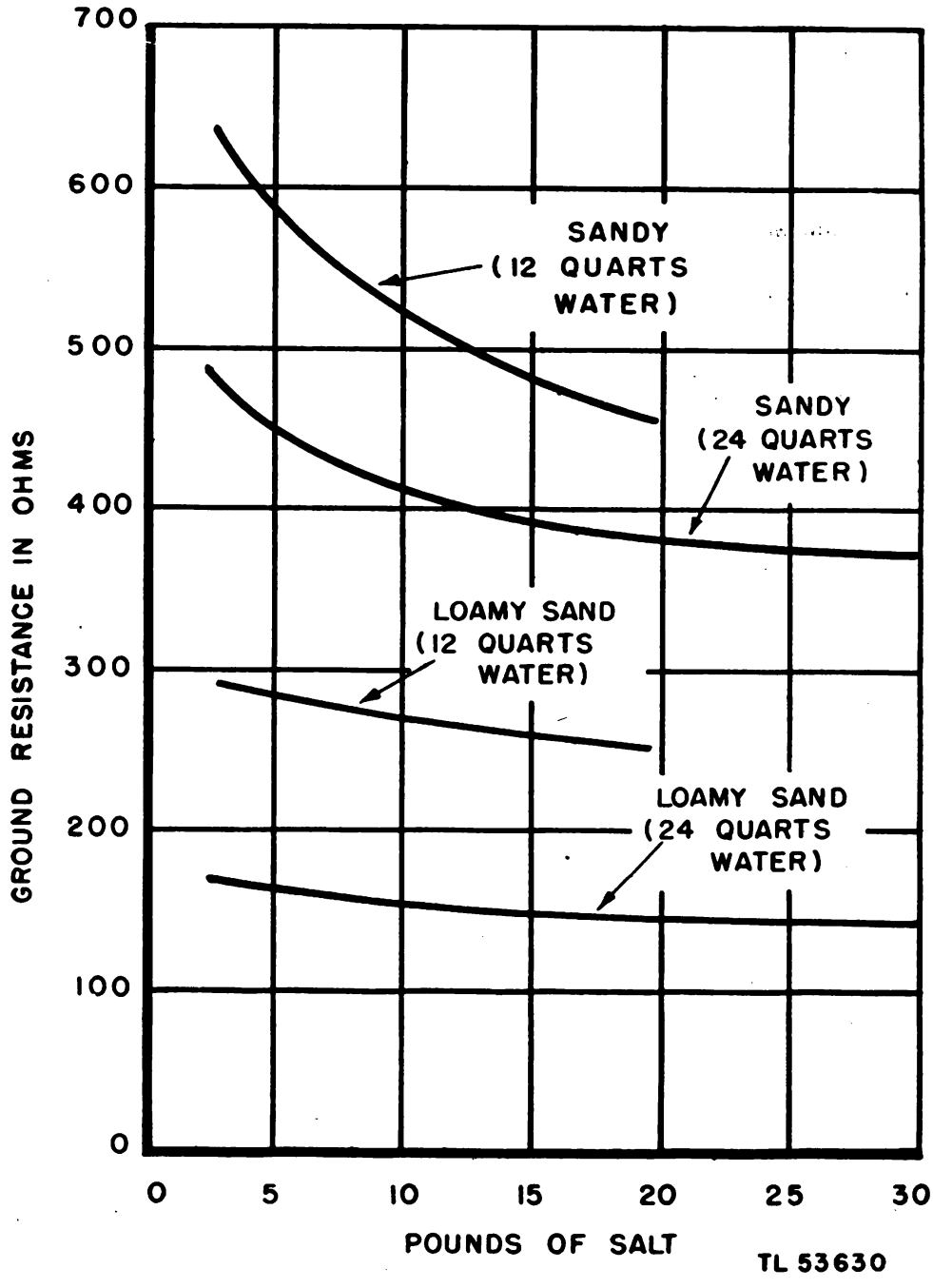

Figure 25. Variation of resistance with salt concentration.

however, porous soil and excessive rainfall or drainage would reduce the period appreciably. In some cases treatment has remained effective for from 3 to 6 years.

37. Corrosion Because of Chemical Treatment

Corrosion caused by chemical action on electrodes is not serious. Rods in the ground for about 5 years have been removed and little corrosion was observed on them. In one case various chemicals including copper sulphate, iron sulphate, ammonium sulphate, and sodium chloride were used in connection with copper, galvanized iron, and plain iron electrodes. Corrosion due to electrolytic action would be more serious if the grounds were required to discharge direct current.

38. Effect of Wet Weather on Certain Circuits

In certain types of circuits for which grounds are arranged under dry weather conditions, the results in periods of wet weather must be considered seriously. Teletypewriter circuits are examples. When a teletypewriter system is set up under dry weather conditions, there is little loss in the circuits to ground because of parallel conductance while weather conditions remain dry. However, in wet weather there may be many paths for circuit voltages to ground. Also, the capacitance between a wet ground and the line wires is much greater than between dry ground and the line wires. This kind of leakage causes teletypewriters to function improperly, requiring adjustment of relays, etc. In extreme cases such leakages can stop operation of the equipment entirely. It is important, therefore, that conductors be insulated and that care be taken to see that there are no breaks in insulation. Wires should be kept out of spots where water gathers or where insulation may be worn down by contact with branches, rocks, etc.

39. Carrier Telephone System Grounding Arrangements

a. A ground is required at each terminal and repeater to protect the equipment and personnel from lightning and other sources of high voltage. The ground also is necessary to reduce crosstalk and noise pick-up and to supply the return circuit for the telegraph and signal circuits. *It is important that all equipment at any one location be connected to the same grounding system.*

b. Connect the carrier equipment to a buried water supply piping system where such a system is available. The neutral wire of a commercial power circuit ordinarily will be found connected to a piping system.

c. Where such a ground is not available, use the best practical ground for the carrier system. This might be a local water supply system, buried gas pipes, underground tanks or other buried metallic structures, or driven ground rods. When grounding carrier equipment, use 10- or 12-gauge wire or larger.

d. The maximum permissible open-wire carrier repeater gain that can be used depends upon the contact resistance between the ground rods, or other means provided, and the earth itself. Difficulty experienced in obtaining satisfactory signaling from excessive noise or crosstalk or in measurements of ground resistance may indicate high ground resistance. In these cases, it is necessary to drive additional ground rods to reduce this resistance. Connect all ground rods together and run a separate wire to the ground binding post of each unit of equipment.

40. Carrier Ground-return Circuits

a. Under emergency conditions a single wire can be used as a circuit for the carrier system, the ground providing the return path. Ground-return circuits are likely to be noisy, may crosstalk into other circuits on the same line, and can be intercepted easily at a distance from the line.

b. The loss of ground-return circuits depends upon the ground resistance at the terminals and at intermediate points. When there are poor ground connections at the terminal repeater points, losses in transmission will occur.

Section V. MAINTENANCE AND TESTING OF GROUNDS

41. Basic Maintenance

Basic maintenance of grounds and protective devices consists mainly of checking periodically and making visual inspections to determine whether—

a. Ground clamps, terminal screws, and all soldered joints are tight. If any are found loose, tighten them immediately.

b. Conductors running from equipment to ground rods are free of grease. Any good solvent can be used to remove grease.

c. Sharp bends or partial loops have developed in conductors that may cause a flow of current from equipment to ground to take an alternate course in case of excessive surges from power lines or lightning.

Note.—More detailed maintenance instructions regarding protective devices are given in section VII where various types of these devices are described.

42. Corrective Maintenance

Any faulty, rusted, or otherwise unfit pieces or components in a conductor between equipment and ground should be replaced immediately. When rubber-insulated wire is used as a conductor, any sections of wire in which the insulation has been damaged should be replaced at once. Electrodes which are found to have become badly corroded should be replaced. Instructions for corrective maintenance of protective devices is given in section VII, which covers these devices in detail.

43. Necessity for Ground Resistance Measurements

a. The direct measurement of ground resistance by self-contained instruments has been made so simple that there is little excuse for guesswork. By using direct measurements it is possible to evaluate the resistance of a ground system while it is being installed, and by periodic tests, to observe changes in resistance in the same area. Procedures published by manufacturers of the equipment include directions covering simple measurements of ground resistance and relatively difficult problems introduced by large areas and low resistance connections.

b. Below are listed some of the reasons why direct, on-the-spot measurements of ground resistance should be taken:

(1) Resistivity of different types of soil varies over wide ranges, depending upon chemical composition of the soil.

(2) Resistivity of any type of soil is subject to wide variation due to changes in moisture content and temperature.

(3) Equations for the calculation of ground resistance, with the exception of the most elementary electrode arrangements, are quite complicated and often are unavailable for unsymmetrical arrangements of electrodes.

(4) Equations for calculating ground resistance for the simpler electrode arrangements assume that the electrode is surrounded by soil of uniform resistivity.

(5) Soil composition at times changes by several hundred percent in a distance of a mile or less.

(6) Soil composition, moisture content, and temperature vary appreciably at different depths. It is not uncommon to find wide variations in these factors in the first 10 feet below the surface.

44. Conclusions

Because so many factors are involved in calculating the resistance of ground connections under the wide variety of operating conditions, the equations for the calculation of resistance are useful only so far as they indicate trends. The resistance of an actual installation can be determined only by tests, using a suitable ground-resistance measuring instrument. A mathematical analysis of trends based on the assumption of uniform earth resistivity leads to the following conclusions:

a. The resistance of the earth's path from a cylindrical electrode varies as the logarithm of the radius. Hence, buried wires, ground wires, or driven rods may be of a diameter dictated primarily by mechanical considerations.

b. The conductance of a driven ground rod increases almost in direct relation to the depth. A group of several ground rods driven to a uniform depth will have a conductance considerably less than the sum of the conductance of the rods taken individually.

c. The conductance of a deep-driven rod usually is greater than the conductance of a group of short rods having the same total length unless the space between the short rods is quite large.

d. The conductance of any system of electrodes spread over a given area and extending to a limited depth approaches that of a metallic box having the same depth and the same total ground surface area. This ultimate conductance is rather closely approached by a comparatively small number of ground rods driven to the same depth, and widely spaced over the area.

e. The choice of the type of ground electrode system for any particular application is determined to a great extent by local conditions. In general, if the subsoil can be penetrated and is of reasonably low resistivity, the driven ground system will prove most economical.

f. In laying out an extensive electrode system for substations, consideration should be given to the potential gradients which may occur at the surface of the soil. Potential controls should be installed below the surface of the ground, especially at points where physical contact by operating personnel is possible.

45. Measuring Ground Resistance

Most methods for determining the value of resistance of a ground require two independent auxiliary grounds in addition to the one under test. These methods may be grouped under three general classifications as follows:

a. Triangulation Method. In this method the series resistance of each pair of grounds is measured. The desired resistance may then be computed from the formula:

$$\mathrm{A} = \frac{(A+B)+(A+C)-(B+C)}{2}$$

where A equals resistance of the ground being measured, and B and C equals resistances of the auxiliary grounds. In solving the formula, first obtain the value of $(A+B)$ by measuring the resistance between ground rods A and B with an ohmmeter. Obtain the value of $(A+C)$ by measuring the resistance between ground rods A and C with an ohmmeter. The value of $(B+C)$ is obtained by measuring the resistance between ground rods B and C with an ohmmeter. Then substitute the readings in their proper places in the formula. If accuracy is expected from this method, the resistance of the three grounds must be of the same order of magnitude. If an ohmmeter is not available, the series resistance may be measured either with a bridge or with a voltmeter and ammeter. Either alternating or direct current may be used.

b. Fall of Potential Method. By this method, a known current is passed between one of the auxiliary grounds and the ground being measured. The drop in potential between the latter and the second auxiliary

electrode is then measured and the ratio of this voltage drop to the known current gives the value of the ground resistance. A voltmeter (high-impedance type) and ammeter may be used for this method, but instruments are available which are more convenient to use because they read directly in ohms. These are of the hand-generator type and are described in paragraph 46.

c. RATIO METHOD. By this method, the series resistance of the ground under test and an auxiliary electrode is determined by a Wheatstone bridge. A slide-wire potentiometer is shunted across these two grounds and the detector connected between the sliding contact and a second auxiliary electrode. The ratio of the desired resistance to the total resistance of the two grounds in series is obtained in this manner. An instrument is manufactured for the purpose of measuring ground resistance by this method. It is known as a groundometer.

46. Ground Resistance Measuring Devices

Several ground resistance measuring sets are available. Among the better known in the Signal Corps are Test Set I–48–B, which is designed primarily for testing insulation resistance but which can be used in an emergency to measure ground resistance, and Test Set I–49. An approximate estimate of resistance can be obtained by measuring, with one of these test sets or their equivalent, the resistance between two ground rods about 5 feet apart and driven 5 feet into the ground. The average of the two readings obtained by reversing the leads to the test sets should be used. The resistance between rods, in ohms, about equals the earth resistivity in meter-ohms at the spot tested. Resistivities may be rated as follows: low, up to 100 meter-ohms; medium, around 300 meter-ohms; high, 1,000 meter-ohms and up. Some of the other types of testers are described below.

a. MEGGER. (1) The megger ground tester is a commercial type of tester especially designed for testing ground resistance. It consists briefly of a current circuit and voltage circuit coupled so that a direct reading is given in ohms. Alternating current is supplied by a hand-driven generator. This current is sent into the ground being tested, and returns by way of the current auxiliary. The potential circuit is connected between the ground being tested and the potential auxiliary. The current and voltage are rectified by a commutator on the generator shaft before it is applied to the measuring coils and, therefore, any effects of stray voltages will not affect the readings unless they happen to have the same frequency as the test current. If there are stray voltages of interfering frequencies, the frequency of the test current can be varied by changing the speed of the crank.

(2) The resistance of the potential circuit is relatively high and allowance is made in the design of the tester for a certain amount of resistance in the potential auxiliary. Increasing this resistance beyond the allowance will cause low readings. High resistance in the current auxiliary will

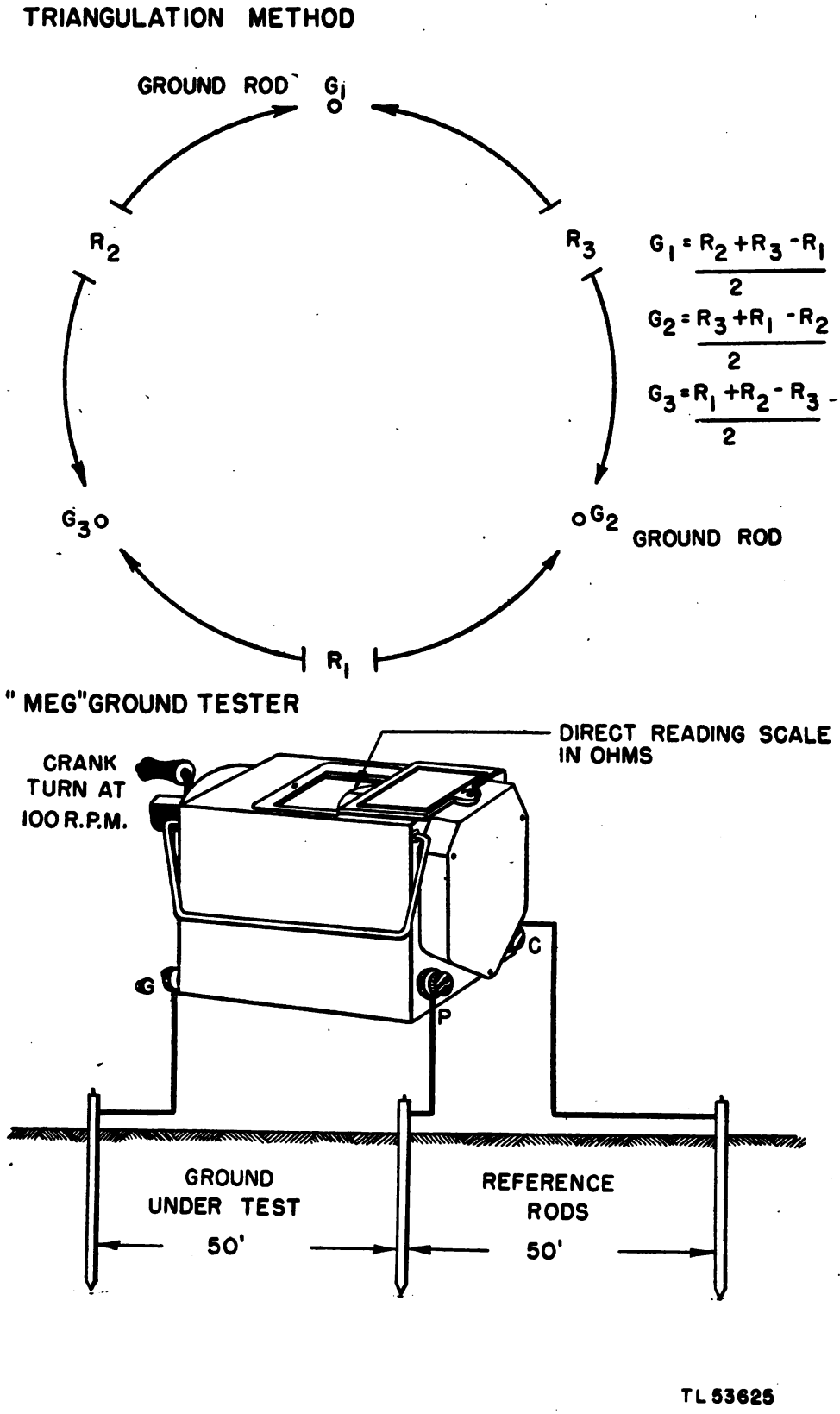

Figure 26. Connections for using the megger ground tester.

lower the sensitivity of the instrument, and in some cases where high resistances are encountered in this auxiliary the readings may be low. Therefore, if the auxiliary resistances are relatively high and accurate results are required, it will be desirable to calibrate the instrument by measuring a known resistance using various values of resistances in the potential and current auxiliary circuits.

b. GROUND OHMER. Like the megger ground tester, the ground ohmer contains a hand-driven generator supplying alternating current to the ground under test. The method used is to balance the potential drop across the ground in question against the drop across a known resistance carrying an equal current or a known multiple thereof. The instrument is direct reading and requires only one adjustment. At balance, the potential auxiliary draws no current and, therefore, its resistance introduces no error. If the resistance of either auxiliary is too high, the sensitivity of the instrument is decreased. Effects of stray alternating currents can be eliminated by changing the speed of the generator until a positive reading is obtained. Stray direct currents, when fairly steady, may be balanced out by adjusting the galvanometer to zero before starting the generator.

c. GROUNDOMETER. A battery and a buzzer are used for a source of alternating current and a telephone receiver as the detector. The proce-

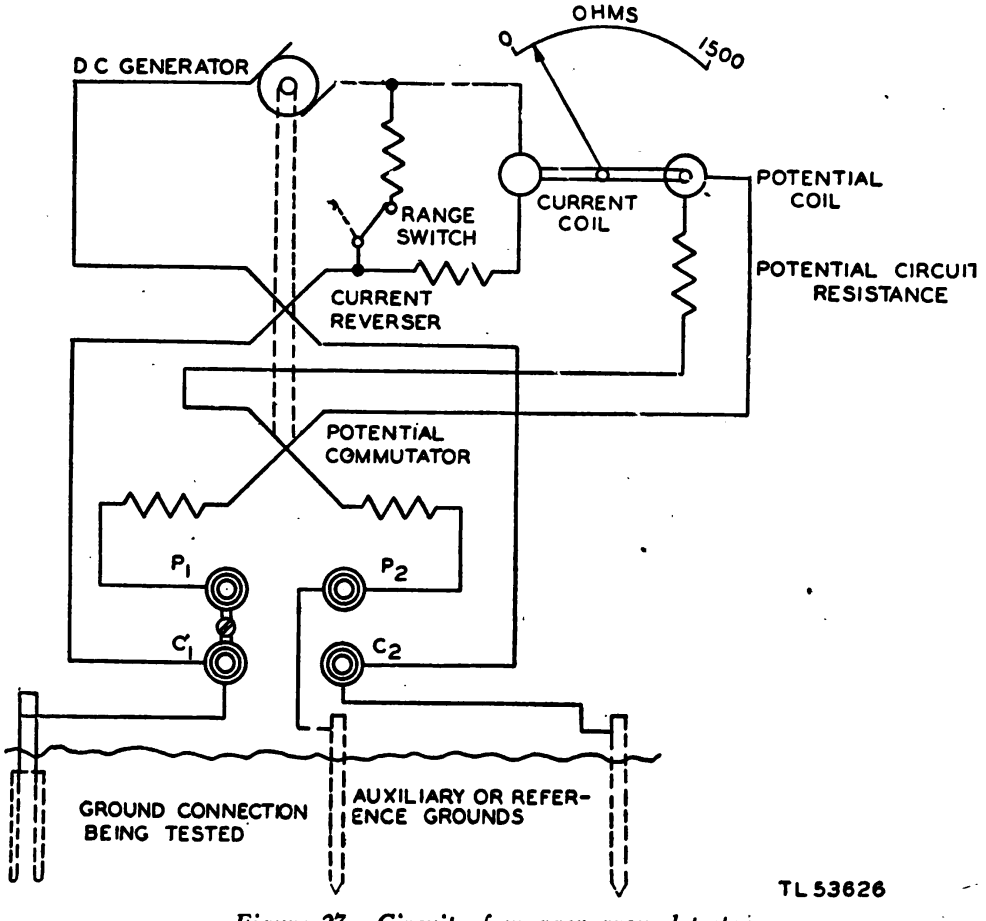

Figure 27. Circuit of megger ground tester.

dure is to determine the ratio, first, by use of a potentiometer calibrated in percent. The circuit is then modified into a Wheatstone bridge by throwing a key, and the series resistance is balanced against the setting on the potentiometer. A direct reading in ohms is thus obtained. However, it is necessary to make two adjustments. This instrument is subject to the same errors as the a-c bridges which are sometimes used.

d. USING A BRIDGE. Either alternating or direct current may be used in measuring ground resistances by use of a bridge. There are certain precautions, however, which should be used with this type of apparatus. In the ordinary d-c bridge, stray currents and contact voltages are likely to cause errors, but they sometimes may be balanced out by taking a large number of readings and reversing the polarity of the battery frequently. A measure of the amount of polarization in treated electrodes may be observed by placing an ammeter in series with the ground. If the current falls off appreciably after application of the measuring voltage, polarization is present. In using an a-c bridge, a buzzer and dry cell battery usually are used for a source of audible frequency with a telephone receiver as the detector. The accuracy of a bridge of this sort will not be affected by stray ground currents, but a balance will sometimes be hard to obtain where stray alternating currents are present. When using a buzzer, care should be taken to limit the length of the leads to the auxiliary electrodes to within reasonable dimensions. If this is not done, errors may be introduced because of the variable impedance of the leads at the various frequencies represented in the current from the buzzer.

47. Location of Auxiliaries

Place auxiliary electrodes at distances far enough from the ground being tested, and from each other, so that mutual effects will not result. Thought must be given to errors that may be introduced by excessive lengths of leads. Usually the current auxiliary is arbitrarily located and the potential auxiliary placed at different points between the ground under test and the current auxiliary. Results of measurements are then plotted on a curve which shows the value of resistance against the position of the potential auxiliary. Note that near the ground being tested resistance values are low, and near the current auxiliary they are high. In both cases they are influenced by mutual reactions between the potential auxiliary and the other grounds. Where the resistance is more nearly constant—in the intermediate range—the mutual effects are minimized. Therefore, a potential auxiliary placed in this intermediate range gives a reliable measurement of the resistance. When this intermediate range is not well defined, the inference to be drawn is that the current auxiliary is too near to the ground under test, and that it should be moved a greater distance away. Generally, it can be shown that the potential auxiliary should be placed at a point distant from the ground under test a bit more than half the distance between the ground under test and the current auxiliary. In many instances where grounds are installed for short-circuiting relay protectors,

the auxiliaries are installed permanently with leads running along the pole line so that measurements can be made periodically.

48. Field Tests

Tests repeated at different locations for purposes of comparison will show various factors that affect the resistance of a ground connection. To determine the best location for a ground rod, various locations should be tested in each different soil condition. Such locations can be classified as follows:

a. Woods, clearing.
b. Base of tree.
c. Dead tree stumps.
d. Brook bed.
e. Roadbed.

49. Effective Ground Shell

Because, as stated above, the resistance by the soil is the predominant part of the ground connection resistance, a handy method of calculating this resistance (R) can be of help.

$$R = \rho \frac{L}{A}.$$

Where ρ is the resistivity of the soil, L is the length of the path and A is the area of the cross section at right angles to the flow of the current. Figure 1 shows a number of concentric shells of earth surrounding the electrode. L is the thickness of the shell and A is the area of the cross section at right angles to the flow of current. Because current flows away from the electrode in all directions, A is the area of the surface of a concentric shell. The shell with the smallest area and, therefore, the largest resistance is that nearest to the electrode. The larger shells with larger areas have small resistances and will be further away from the electrode. As units of resistance are added to obtain the total resistance, the concentric shells further away from the electrode add little to the total resistance because of their large area A. As outlined in paragraph 34, 90 percent of the total electrical resistance surrounding the driven electrode will usually lie in an effective ground shell having a radius of from 6 to 10 feet.

50. Increased Effective Earth Shell

If a ground rod is driven deeper, the result is that of increasing the dimension A of the effective earth shell. Another way to get a like result is to drive additional ground rods and connect them in parallel. However, for maximum effect, the effective earth shells of adjacent ground rods should not overlap. All of this stresses the importance of correct spacing of ground rods in parallel, placing them at predetermined minimum dis-

tances. Because the resistance of two ground connections in parallel is slightly larger than two pure equivalent resistances in parallel, the number of ground rods that can be connected in parallel always approaches a saturation limit beyond which any additional ground rods in parallel will not aid in reducing the combined ground resistance.

Section VI. OTHER GROUNDING MEDIUMS

51. Varied Results in Same General Area

A study of established values indicates that varied grounding results are obtained for specific locations, even in the same general area. This fact alone shows that it pays to explore any area for the best grounding location. Some examples illustrating these variances follow:

a. Rod Driven in Tree Base. A ground rod driven at the base of a tree will not always give low resistance. Tests show that sometimes high resistances are encountered and at other times low resistances result. Placing an electrode close to the roots of a tree has the advantage of providing, as a rule, a more conductive soil for the electrode earth shell, but at the same time a wood mass is introduced which is of lower conductivity than soil. A small ground rod or a large nail driven into the trunk of a tree will sometimes provide a temporary low-resistance ground connection. As soon as this connection polarizes, however, the resistance will become high. Tests show that driving ground rods close to the bases of trees or in the trunks of trees bring inconsistent results.

b. Rod Driven in Dead Stump. A rotten tree stump represents woody peat (decomposed wood) and, if moist, will have a lower resistivity than some soils. However, the use of such a location will only be of help where surrounding soil is of high resistivity and when the tree stump is quite wet.

c. Rod Driven in Roadbed. There is some advantage in driving ground rods in roadbeds because a road may have a cinder or clay fill and is always in a packed condition.

d. Rod Driven in Brook Bed. The high moisture content of a brook bed usually aids in reducing ground resistance, but ground rods driven into the bed of a mountain stream may result in a high ground resistance if the water is relatively pure and the soil does not contain conducting elements.

52. Metallic Return Circuits

When the grounding procedures outlined above fail to produce satisfactory ground resistance, and especially if the ground connection is to be used as a return circuit for telegraph or teletypewriter equipment, it will be advisable to use a metallic-return circuit.

53. Emergency Grounding

Often, because of lack of time or for tactical reasons, it is necessary to make emergency grounding connections for the use of certain types of telephone communication equipment in which resistance of the ground connection is not too critical. In such cases, usually it will be possible to provide satisfactory ground connections by the use of bayonets, spikes, and other metallic objects without treating the soil.

PART TWO

PROTECTIVE DEVICES

Section VII. DESCRIPTION AND USE

54. General

Potentials greatly in excess of normal working voltages are impressed upon wire communication and signal circuits as a result of lightning and surges from power lines. This is particularly true in aerial circuits in which conductors of considerable length are used and these conductors are not in cables. Underground cables, which have no connections with aerial wire, are so well shielded that lightning effects upon them are usually negligible. If protective devices are not used, the presence of these abnormal potentials may result in injury to persons using or working upon the circuits, or damage to equipment through break-down of insulation. It has become the general practice to provide on communication circuits protective devices designed to minimize lightning effects and abnormal surges of current power lines. The protector is usually located at the junction of the exposed line with the equipment to be protected. This section of the manual deals with protection against lightning and other abnormal current surges on circuits and apparatus connected to them. The purpose is to set forth needs and methods whereby the hazard to life and property and interruption of communication may be minimized.

55. Extent Required

a. In general, protective devices are supplied as an integral part of tactical equipment. Under combat conditions, it is unlikely that power lines will be energized; hence, for small-capacity equipment, protection is primarily against lightning. Larger-capacity equipment, normally used close to the front, also is protected against power-line faults, since such equipment is often used farther to the rear in areas where power lines are energized.

b. Where protection is not an integral part of the equipment, provision should be made to install it unless there are no working power lines in the

locality and thunderstorms are infrequent. Power-line faults may develop in areas subjected to bombing or other enemy action, and therefore the lines require protection.

56. Commonly Used Protectors

a. Types of protective units and the way they are used vary with particular situations. In general, line protective devices are of three different types: open-space cut-outs, fuses, and heat coils. Fuses and fusetrons (a time-delay type fuse) are used for the protection of internal power circuits of various wire communication units. The receptacles for these fuses and fusetrons are often incorporated within the units themselves.

b. Nullification of any of the fuses or protective devices by straps, pennies, tinfoil, or any other means *must not* be done except where the urgency of possible operation is more important than the possible sacrifice of the equipment. A tag giving the details and date of nullification should be attached in a conspicuous place. The nullified protective device should be put in order as soon as replacements can be obtained.

57. Protection of Station Equipment

a. GENERAL. Usually all wire communication power circuits have some form of current-limiting devices such as a fuse or current-limiting resistor incorporated in the circuit. Additional protective devices must be placed in practically all installations to protect the apparatus from excessive current induced in the line from foreign sources. Foreign sources include lightning, other atmospheric disturbances, electric power lines running close to the signaling wires, and high-powered radio transmitters. Practically all outside wire lines or cable, except such conductors as are completely underground from terminal to terminal, may be exposed from time to time to one or more of these foreign hazards. Accordingly, whenever exposed wires are led into a terminal or teletypewriter station, they should be connectetd to protective devices such as station protectors, frequently called lightning arrestors. (See fig. 28.) The station protector is composed of open-space cut-outs (fig. 29) and fuses (fig. 30) mounted on porcelain blocks. Western Electric No. 98A (Protector AR–6), Cook model O (Protector AR–6), and Reliable model 1000 (Protector AR–4) are examples of station protectors used by the Signal Corps. A combination of open-space cut-outs and heat coils (fig. 30) is used in exchanges or switching central installations. This protective apparatus is sensitive enough to operate before the equipment which it is protecting is damaged, but not sensitive enough to cause unnecessary service interruptions.

b. OPEN-SPACE CUT-OUTS. The most common type of open-space cut-out consists of two carbon blocks having an accurately gauged separation of a few thousandths of an inch. One of the carbon blocks is connected to ground and the other to the wire which is to be protected. (See fig. 29.) One carbon block is much smaller than the other, the smaller one being

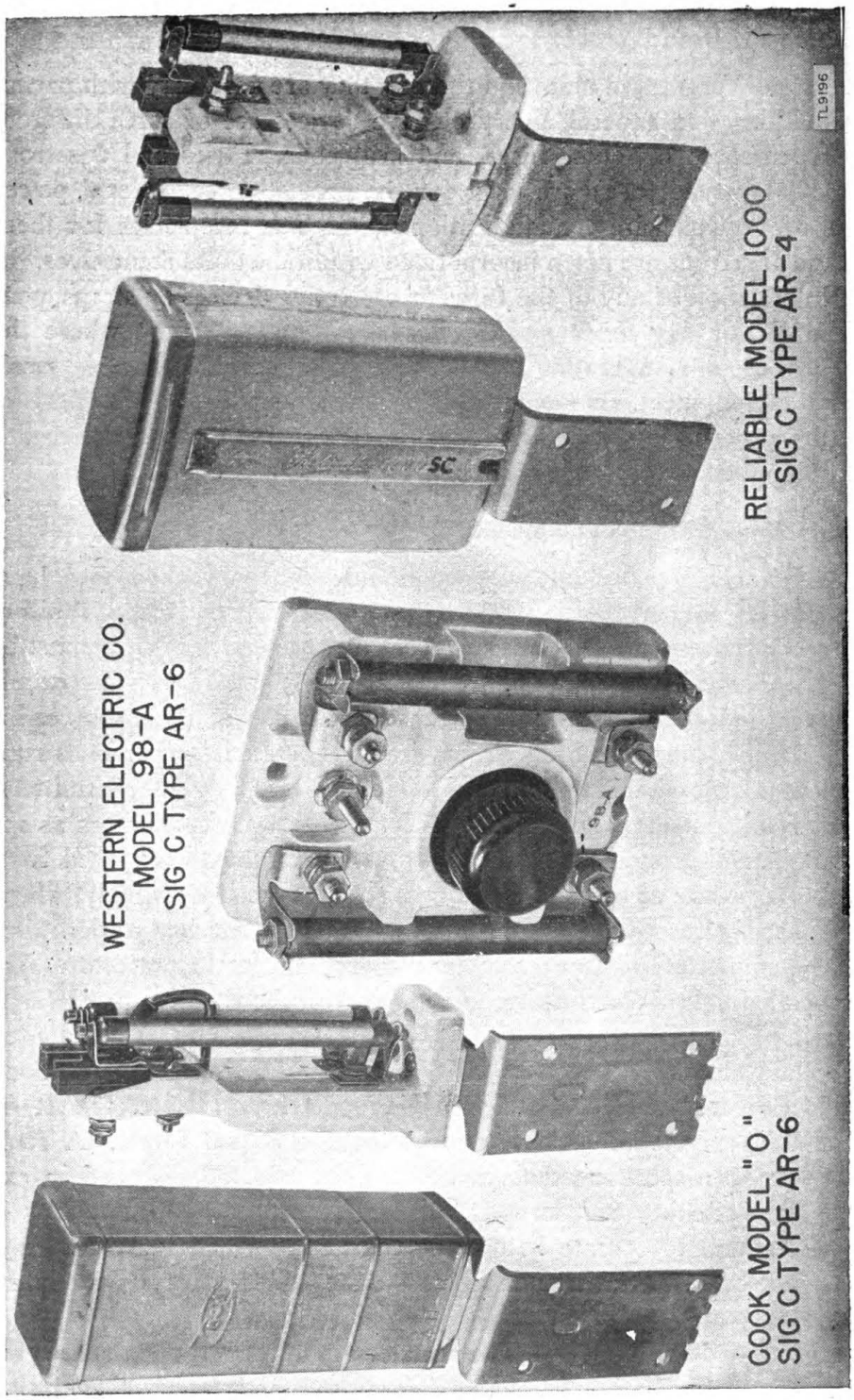

Figure 28. Typical station protectors.

mounted on the center of a porcelain block. When the voltage on the wire becomes too high, an arc is established across the small air gap between the carbon blocks and is grounded. If a considerable current flows across the gap in this way, enough carbon may be pulled from the blocks by the arc to bridge the gap and to cause permanent grounding. In extreme cases, when the discharge is prolonged and very high, the glass cement holding the small carbon insert in the porcelain block may be melted. The result is that the blocks are forced into direct contact by the mounting springs in which they are held. In the majority of protector operations, however, the blocks do not become permanently grounded. The air-gap space between the carbon blocks is so designed that the operating voltage of the protector will be less than the break-down voltage of the weakest point of the circuit which it is designed to protect, and greater than the maximum working voltage of the circuit. The average operating voltage of the open-space cut-outs used at teletypewriter stations and at terminal stations is approximately 350 volts. Open-space cut-outs are used only in conjunction with the signal line to prevent it from conducting large foreign voltage into the apparatus being used.

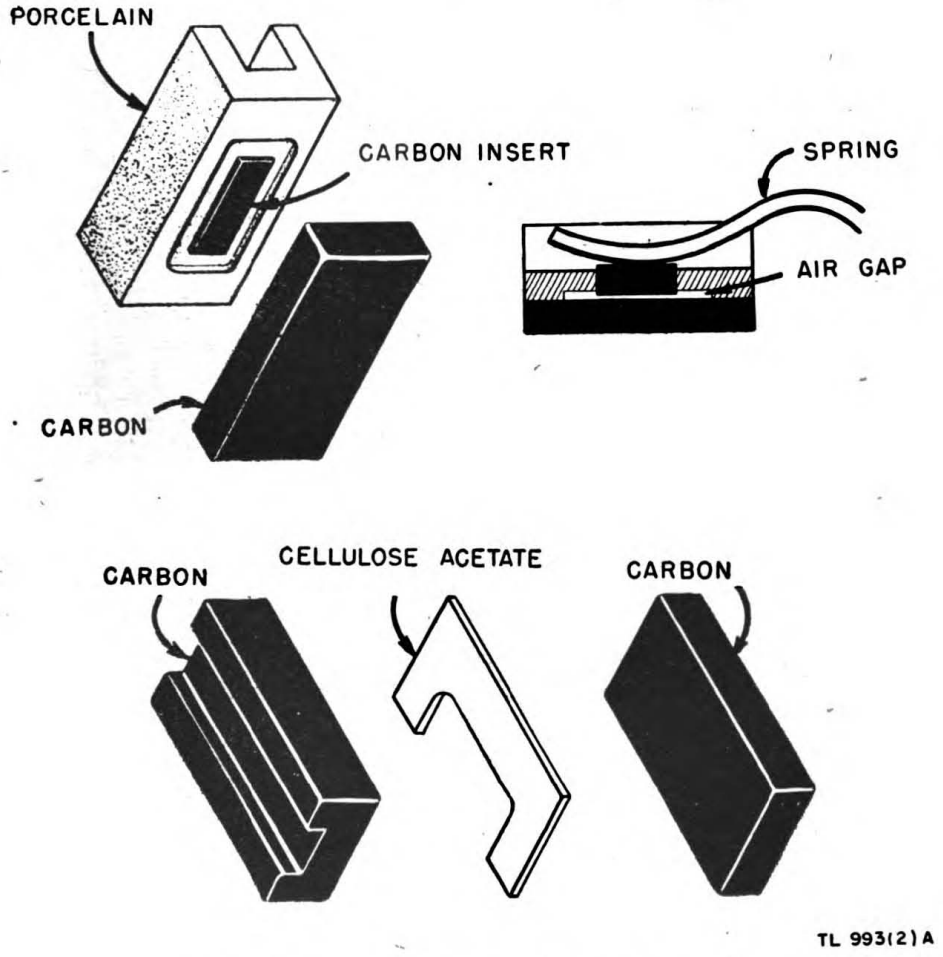

Figure 29. Two types of open-space cut-outs.

c. LINE FUSES. When a signaling line is grounded by the operation of an open-space cut-out, current continues to flow through the signaling conductor to ground as long as the exposure continues. This current may be large enough to damage the signaling lines of the protective apparatus itself. Therefore, it is necessary to insert a device in the conductor on the line side of the open-space cut-out which will open the conductor when the current is too large. Fuses (fig. 30) are used for this purpose. The fuse is a metal conductor inserted in series with the wire to be protected, and is made of very fine copper alloy wire which melts at a comparatively low temperature. Short lengths of cable conductors (6 feet or more) of 24 or smaller gauge serve effectively as fuses and limit current to maximum values of from 7 to 10 amperes. Where the use of such inserted fine-gauge cable is not practicable, lead alloy fuses mounted in fireproof containers or in fireproof tunnels, are used. These are also designed to operate with a current of from 7 to 10 amperes. The line fuses discussed here (fig. 30) should not be confused with the fusetrons and fuses used

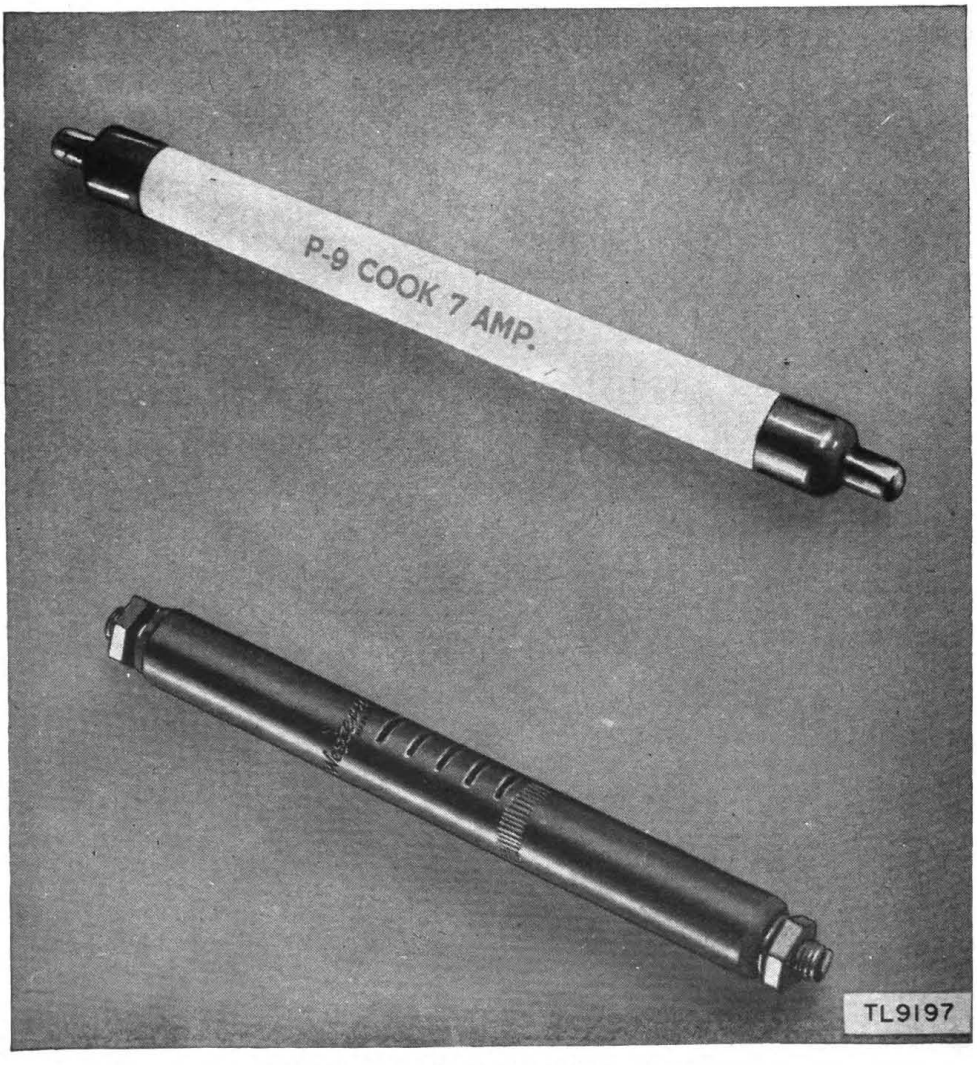

Figure 30. Two types of line fuses.

on teletypewriter equipment for internal protection which are entirely different in function and design.

d. POWER FUSES. The type and volume of current affects the rating of the fuse required. It is recommended that supply mains, whether alternating or direct current, or both, be protected at the main power switch by plug or cartridge type fuses, or by a protective circuit breaker. If power supply mains are not fused as they enter a terminal strip, each separate unit or unit combination should be fused in its particular power feed line. Some of these fuses are mounted near the equipment and others in the equipment. In some equipments fusestats may be supplied instead of fusetrons. Fusestats are available in the same current ratings as fusetrons, but in some cases require the use of special adapters, for example in the standard Edison base mounting on teletypewriter equipment. The adapters for each of the fusestat ratings are different and are not interchangeable. Also, once an adapter is installed it cannot be removed without destroying either the adapter or the Edison base fuse block on teletypewriter or other equipment. Thus the use of a fusestat guarantees that a fuse of the wrong rating cannot be inserted by mistake, and thereby overload the equipment.

58. Protection of Personnel

a. GENERAL. As a rule, voltages used are the same as for ordinary house wiring, about 110 volts, but some installations use 220-volt alternating current. Voltages encountered inside rectifiers may reach high values, especially if the output and bleeder circuits are open. Operators and other personnel should not attempt to repair or adjust equipment in which high voltages may be present until they have taken the necessary precautionary steps.

Caution: Any power voltage when improperly or carelessly handled can seriously injure a person. Be sure to disconnect source of power and discharge filter capacitors before touching terminals.

b. COVERS, PANELS, AND BOXES. Covers, panels, and boxes should be kept in place and closed on all equipment where they are provided. Rectifier covers and panels should be replaced when the reason for their removal no longer exists. No equipment should be put into regular service unless its covers and guards are in place.

c. MOTOR GENERATORS. Motor generators or other rotating equipment installed in a station should have their rotating parts covered so that clothing, fingers, arms, or legs of attending personnel cannot be caught in the moving parts or come in contact with electrical circuits. Also, covers prevent tools and other foreign objects from falling into the equipment and short-circuiting or otherwise damaging it. *Do not* operate motor generators with covers, guards, or barriers removed unless absolutely necessary, and then for a *limited time only.*

d. HEAT COILS. Frequently it is necessary to protect apparatus against external effects in which the voltages are not high enough to operate the

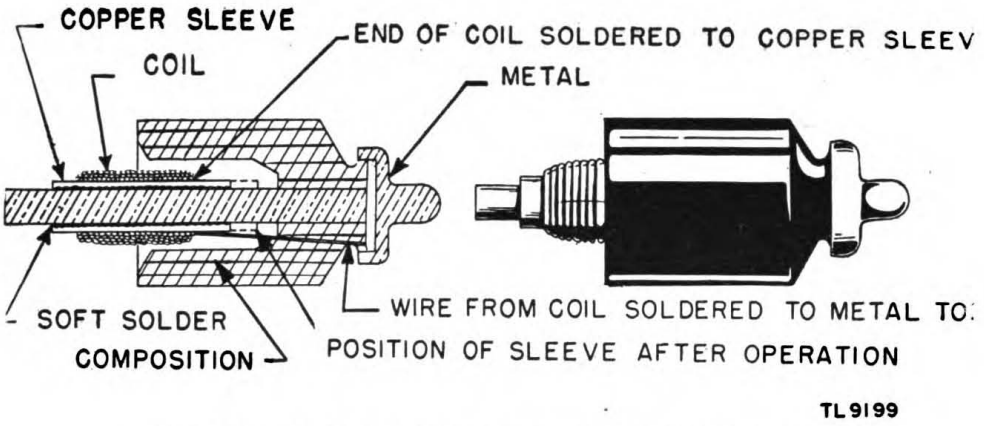

Figure 31. Heat coil, showing over-all and cross-section view.

open-space cut-outs, and in which the currents are not high enough to operate fuses. The currents, however, might still be high enough to damage the apparatus if allowed to flow over long periods of time. Such currents are usually called sneak currents and are guarded against by the use of heat coils. A heat coil is a small coil of wire wound around a copper tube which is connected in series with the wire to be protected. Inserted within the copper tube and held in place by an easily-melted solder is a metal pin which is connected to the line side of the coil. (See fig. 31.) If enough current flows through the coil to melt the solder, the pin moves under the pressure of its mounting spring and connects the line to ground. A heat coil now in general use in large commercial wire systems is designed to carry 350 milliamperes for 3 hours and to operate 210 seconds on a current of 540 milliamperes. In certain instances, similar heat coils are used to open circuits and not to ground them. When used in line circuits where conductors enter a central office, the heat coil is mounted on the equipment side of the open-space cut-out. In this position, induc-

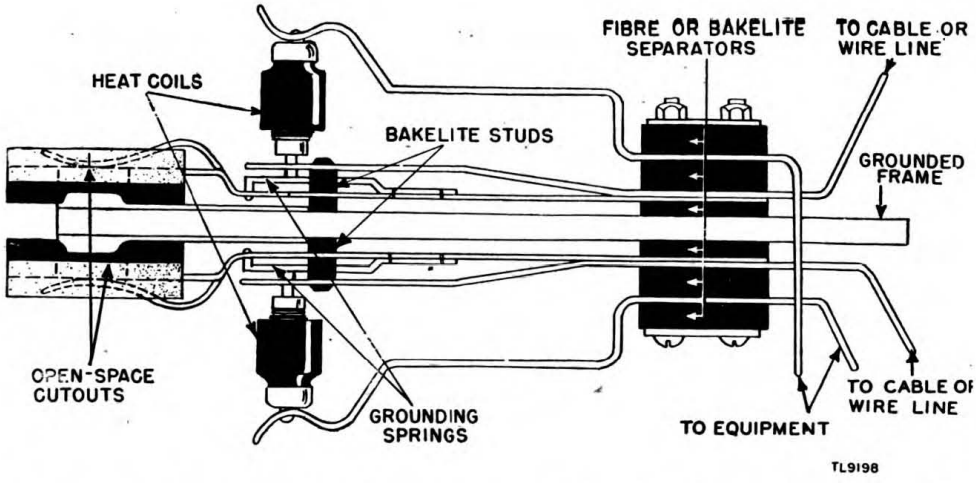

Figure 32. Typical central office protector unit using two heat coils and two open-space cut-outs.

tance of the heat-coil winding aids the operation of the open-space cut-out by presenting considerable impedance to suddenly applied voltages such as are produced by lightning discharges. Because of the limited space factor, the small size of the heat coil lends itself readily to installation in central offices. Also, central offices are more susceptible to sneak currents than substations. Figure 32 shows a typical central office protector unit using two heat coils and two open-space cut-outs. These units are mounted in groups on a metal base, and a number of the groups are placed one above the other on central office protector frames.

59. Protection of Switchboard Equipment

a. TACTICAL SWITCHBOARDS. Protection required for tactical switchboards is generally furnished as an integral part of equipment. When such switchboards are put in service it is necessary, for the protection to function properly, to connect the ground post to a suitable ground.

b. OTHER SWITCHBOARDS. Where protection is not included as an integral part, separate mountings must be provided at large switchboard locations. A multiple mounting, designed for protection blocks and heat coils only, is generally used; a separate mounting is used for fuses if required. For smaller switchboards, a multiple mounting suitable for installing protector blocks, fuses, and sneak-current protection is used. A typical switchboard protector is shown in figure 33. Unless circuits are entirely in underground lead-covered cables in well built-up areas, protector blocks should always be used at switchboards, since cables and rubber-covered conductors may be subjected to excessive lightning potentials even when buried. Fuses may be omitted at switchboards where the circuits are in lead-covered cable if not less than 6 feet of the cable,

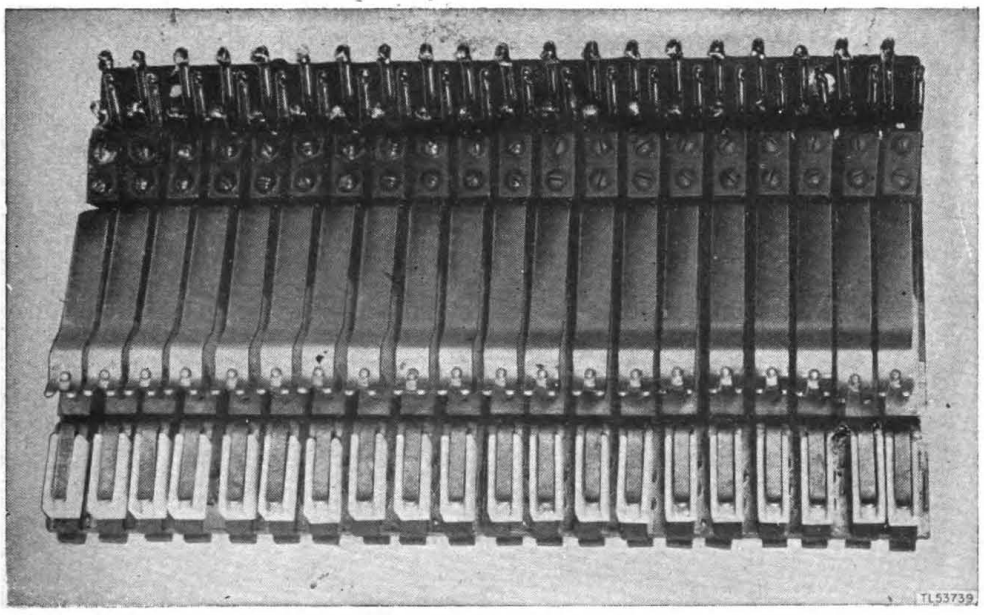

Figure 33. Typical switchboard protector.

between any power exposure and equipment, is made up of conductors not larger than 24 gauge. Such small conductors will limit the current to such an extent that fuses are not necessary. Fuses also may be omitted where communication circuits are entirely in rubber-covered wires even where exposed to contact with power circuits. Experience has shown that under this condition a sustained contact with the power circuits is unlikely.

60. Protection of Telephones

a. PORTABLE TELEPHONES. Portable telephones ordinarily are not provided with protection, mainly because it is difficult to apply protection and to provide suitable grounds. The hazard is small since the circuits usually are not exposed to power contact and, when not too long, receive a measure of protection from the protector in the switchboard to which they are connected.

b. FIXED TELEPHONES. Except in well built-up areas where circuits are entirely in underground lead cable, or where circuits from switchboards to telephones do not extend outside of a building, fixed telephones should be provided with fuses and protector blocks. In general, an individual protector is used for each pair of wires. If it is necessary to locate protectors outside, they should be protected from the weather by suitable housing. A typical protector used for fixed telephones is shown in figure 34.

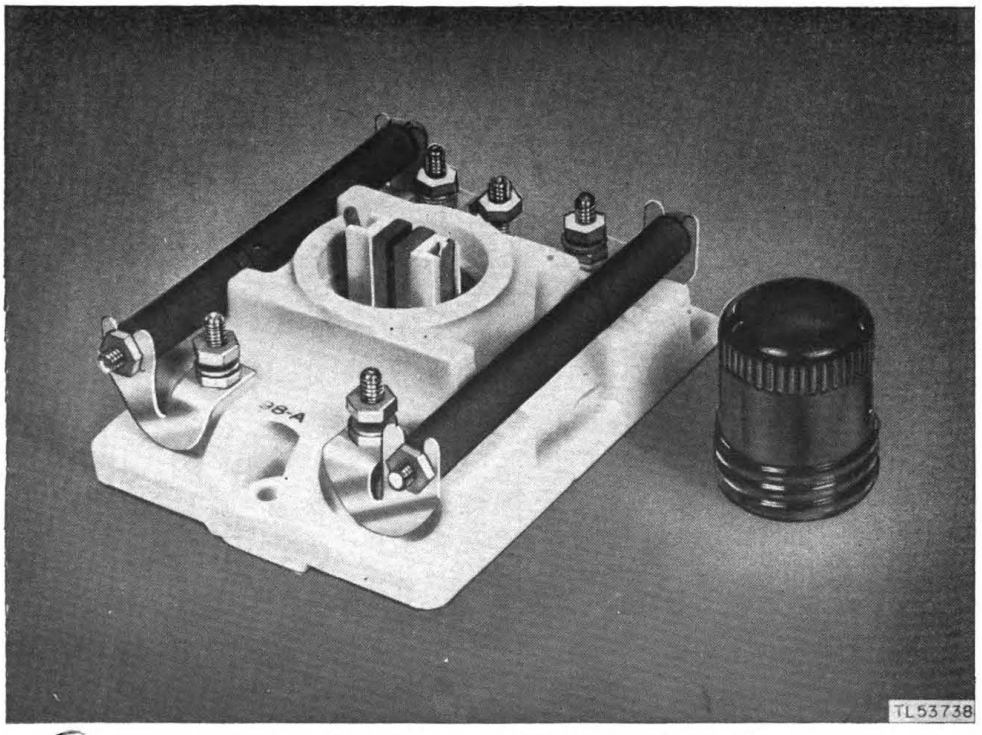

Figure 34. Protector for fixed telephone.

61. Location of Protectors for Switchboards and Telephones

The best location for protectors varies with the type of plant and local conditions. Unless protectors are an integral part of equipment, they should be located at an accessible point as near as practicable to the entrance of the wires into the building. They should not be installed in damp locations or in the vicinity of easily ignited materials. Application of these protection principles is illustrated in figures 35, 36, and 37.

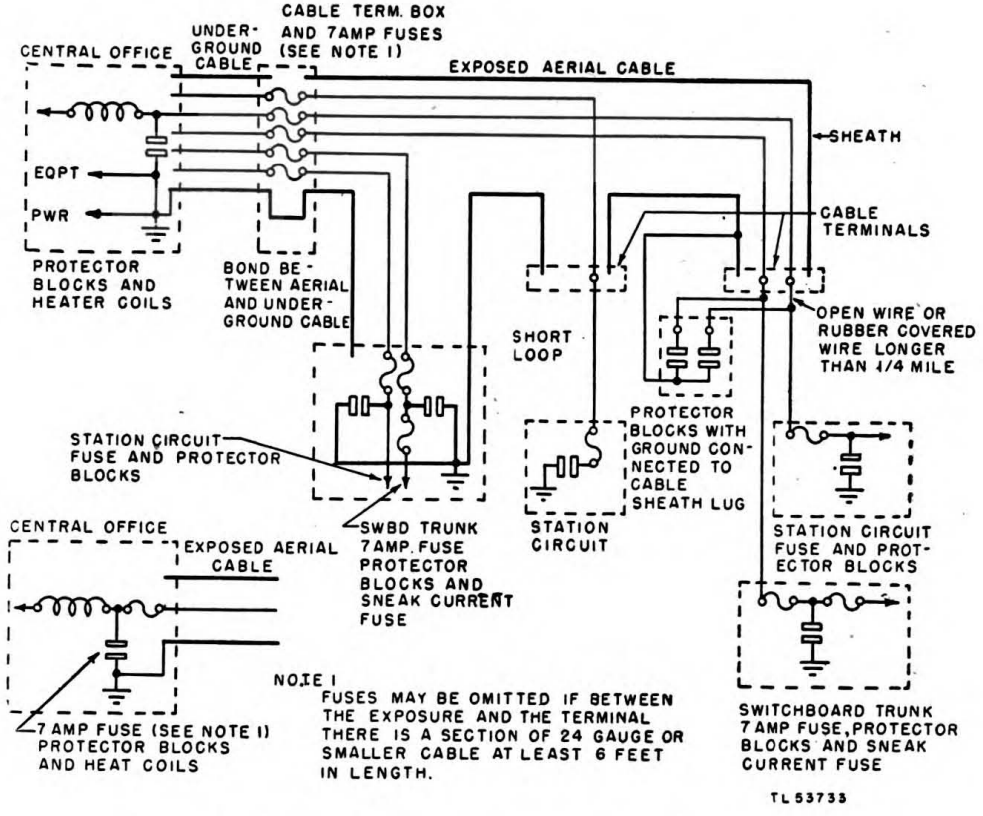

Figure 35. Protection for an extensive communication system.

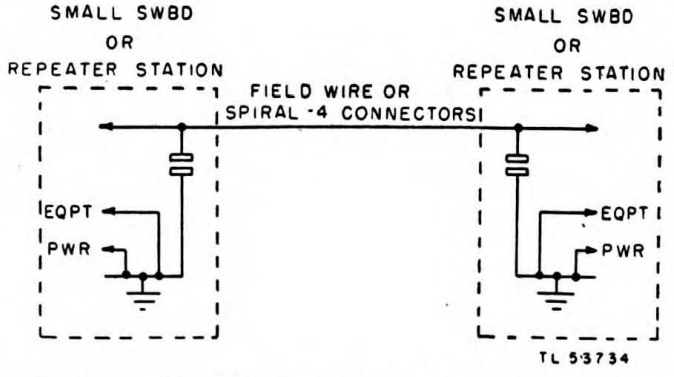

Figure 36. Protection when there is no open wire between equipment.

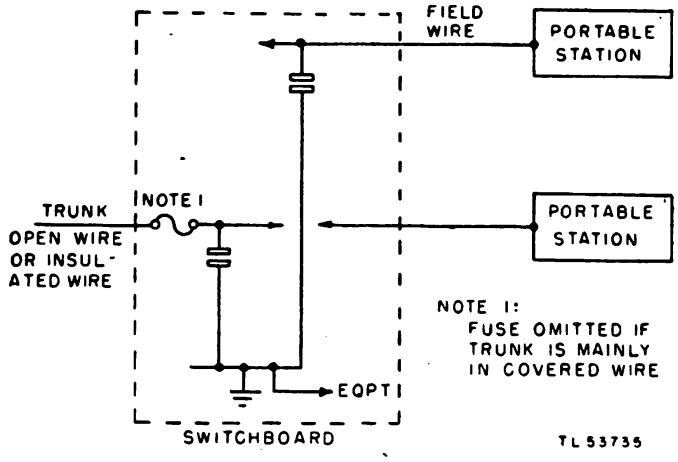

Figure 37. Protection for portable switchboard.

62. Protector Drainage

Operation of protectors by lightning may cause false operation of carrier telegraph equipment due to metallic-circuit voltage set up by lack of symmetry in the discharges through the protective gaps. This trouble may be largely reduced by replacing the ordinary protectors with protected drainage. This drainage consists essentially of a well-balanced two-winding coil with each winding connected in series with protector blocks to ground. This coil equalizes the discharges through the gaps. A schematic circuit of protector drainage and typical equipment is shown in figure 38. Protector drainage is, in general, supplied with both the

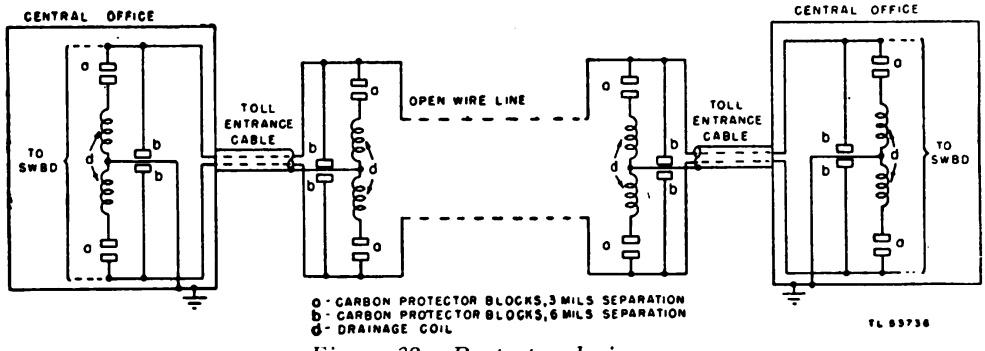

Figure 38. Protector drainage.

packaged telephone-line transmission equipment and the portable carrier telephone-line transmission equipment. The drainage has been physically located with the equipment. Where lead-covered, paper-insulated entrance cable is used, protector drainage may be required at the junction of open-wire and entrance cable in situations where lightning is prevalent enough near the entrance cable to cause serious effects on carrier telegraph.

63. Protection of Cables

a. Protection of Lead-Covered Cables at Aerial-Wire Junctions. (1) To protect lead-covered cables against lightning, aerial wires (open

wire, field wire, or spiral-four) over ¼ mile long and connected to cable conductors should be equipped with protector blocks at their junction with the cable. If, on this basis, one or more cable circuits require protection, all other wires connected to the same terminal, regardless of their length, should be provided with protector blocks to avoid excessive potential between cable conductors. Unless the length of one or more open-wire circuits at a particular terminal is over ¼ mile, no protection is required at that terminal.

(2) At the junction of aerial wire and cable, the protectors may be an integral part of the cable terminal; however, a more common method is to use a separate mounting suitable for attachment to a pole or crossarm similar to that shown in figure 39.

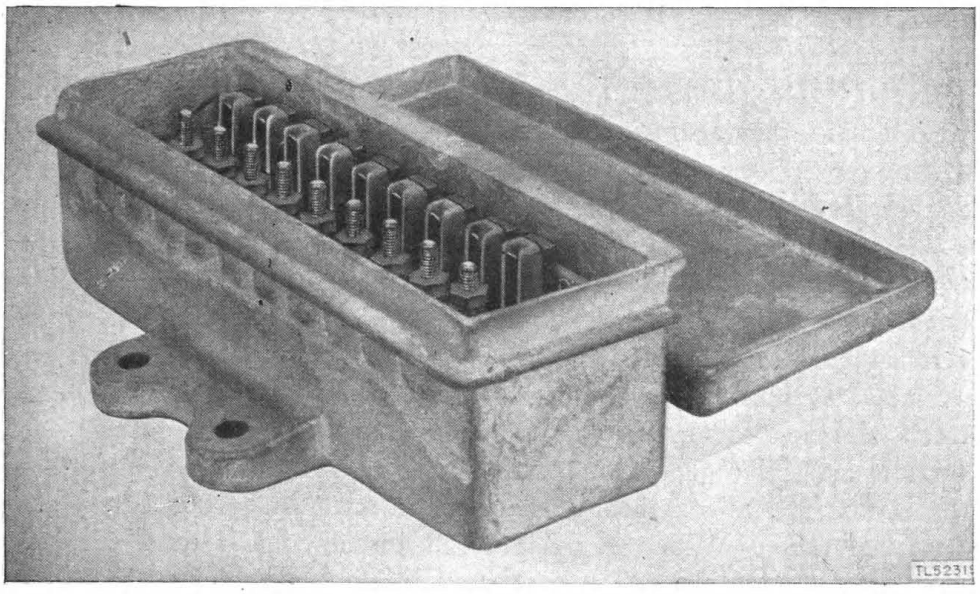

Figure 39. Cable protector.

(3) Protectors installed at the junction of cable and aerial wires should have the grounding terminal connected to the cable sheath. Where an aerial cable is small, especially where the soil resistivity is high and lightning is severe, it is desirable to install a ground on the cable sheath at the open-wire junction. Such a ground should have as low a resistance as can be practically obtained.

b. Protection of Lead-Covered Long Distance Cables. For aerial or varied lead-covered long distance cables, most of the lightning damage is due to direct strokes to the cable sheath. Such strokes may give rise to excessive voltage between the sheath and the cable conductors, particularly when the cable is of small size and the earth resistivity is high. For this reason, small-sized paper-insulated cables should be provided with extra insulation between the conductors and the sheath when used in such areas.

c. JUNCTION OF OPEN WIRE WITH FIELD WIRE OR SPIRAL-FOUR CABLE. Ordinarily no protection is placed at the junction of open wire with field wire or spiral-four cable since the likelihood of failure, in general, is small. However, in areas where lightning storms are frequent and varied spiral-four cable is inserted in open-wire lines, for example at a railroad crossing, it may be desirable to place protection (a 0.006-inch gap) at the junctions of the open-wire and spiral-four cable. An effective ground can be obtained by installing a bare wire (No. 14 or larger) with the varied cable. The same considerations apply to varied field wire inserts in an open-wire line.

64. Protection at Radio Stations

a. PORTABLE EQUIPMENT. No protection is required for portable radio equipment sets. With the short antennas used, the hazard of lightning is slight.

b. FIXED STATIONS. (1) The smaller stations as a rule need no protection, since they also used short antennas. Where protection is desired, as an exposed location with frequent lightning storms, it may be provided as described below.

(2) Protection methods for large stations depend on the type of antenna and associated transmission line used. Tall radiating masts insulated from ground should be provided with a gap (round or sphere type) across the base insulator. In severe lightning localities, wooden poles used as antenna supports should be protected against shattering. Where a single antenna lead-in wire or an open-wire transmission line is used, suitable protective gaps should be installed between such conductors and the station ground on the buried grid (network of ground wire) at or near the station. Where a coaxial transmission line is used, the outer coaxial conductor should be connected to the station ground and also grounded at the base of the pole or tower to the buried grid, if available, or to a driven ground. If the coaxial cable extends up a steel tower, it should be bonded to the tower both at the top and bottom.

(3) Where coupling equipment is placed at the junction of coaxial line and antenna, sphere gaps or equivalent (usually furnished with the equipment) are placed between the antenna terminals of the equipment and the coaxial outer conductor. Equipment installed in series with antenna conductors, such as the resistance placed in the far end of rhombic antenna, have a protective gap (generally a horn gap) breached across it.

(4) All grounding connections at the station including the buried grid, if any, should be made to a common ground bus.

65. Special Applications of Protection

Some of the most common situations occasionally arising and requiring special protection are briefly discussed in this paragraph.

a. PROTECTION OF POLES. (1) Shattering by lightning of wooden poles in a wire or aerial cable line usually can be avoided by running a wire (for example, 104 copper or 109 iron wire) from the top of the pole to a short distance below the ground. If new poles are being placed, such wires can be stapled on for the entire length. For the protection of linemen, it is desirable to avoid having a ground at the top of the pole. A gap about a foot long may be left in the wire approximately 7 feet above the ground.

(2) The plan just described cannot ordinarily be used where wooden poles are used as antenna masts, since it may interfere with radio communication. For such cases, a series of short gaps may be placed in the wire at intervals not exceeding a quarter wavelength.

b. PROTECTION OF EQUIPMENT INSERTED IN OPEN-WIRE LINES. Equipment such as loading coils or repeating coils installed in an open-wire line is vulnerable to lightning if not protected. The principle of protecting such equipment is shown in figure 40. It is important that the

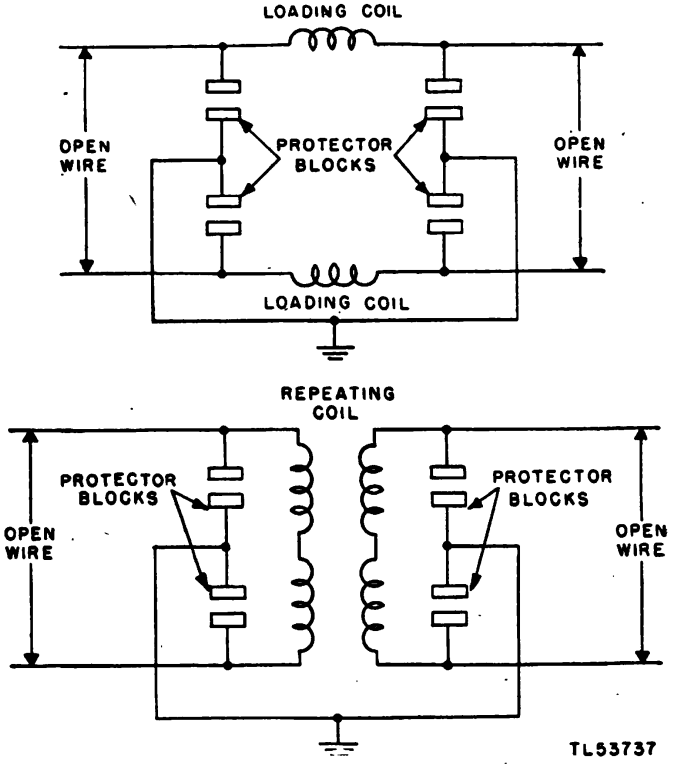

Figure 40. Protection of equipment in open-wire lines.

protection applied to the lines in both directions be connected to a common ground. The resistance of the ground in this case is not important. Where the coils are an integral part of a wire assembly or are sealed in compound such as the loading coils and spiral-four connectors, protection can be placed only at the time of manufacture.

Section VIII. MAINTENANCE OF PROTECTIVE DEVICES

66. Protectors, Protective Gaps, Line Fuses, and Sneak Current Protection Fuses

All of these protective devices should be maintained in approximately the same manner. The protective devices should be checked periodically and after each severe electrical storm. In areas where electrical storms are numerous, periodic checks should be more frequent than in areas where weather conditions are normal much of the time. Replace badly damaged protective devices. Check protective devices with porcelain frames for cracks and evidence of heat having been intense enough to melt cement designed to hold carbon inserts. Protective devices with this type of damage should be replaced immediately. When carbon protective devices are found to be only slightly pitted, clean them by rubbing the flat surfaces of the two blocks together or by rubbing them with an abrasive cloth. If carbon blocks are badly pitted, replace them with new blocks. Open fuses can be easily found as the two fuse terminals will show marks of the excessive heat of the surges of the power or lightning.

INDEX

	Paragraph	Page
Aerial circuits, potentials	54	42
Aerial wire, cable protection, junction of cable	63*a*(3)	53
Antenna, supports, radio station, protector gaps for	64*b*(2)	54
Application of—		
Ground connections	8	9
Protection, special	65	55
Arrestors, lightning	57*a*	43
Artificial treatment of soil	35	28
Auxiliary electrodes	47	38
Bare wire:		
Buried, grounds	10	10
Grounding varied cable	63*c*	54
Basic maintenance:		
Grounds	41	32
Protective devices	41	32
Bayonets, grounds	53	41
Blocks:		
Carbon, cleaning	66	56
Bonding of coaxial cable, radio protection	64*b*(2)	54
Boxes, equipment, protection of personnel	58*b*	47
Bridge, use of, measuring ground resistance	46*d*	38
Brook bed ground, moisture content	51*d*	40
Buried water system, grounds	2*a*	1
Buried wire, grounds	2*a*	1
Cable conductors, avoiding excessive potentials between	63*a*	52
Cable protection:		
Junction of cable and aerial wires	63*a*(3)	53
Separate mounting for protective devices	63*a*(2)	53
Cables:		
Grounding by bare wire	63*c*	54
Lead-covered, long-distant, protection of	63*b*	53
Lead-covered, protection against lightning	63*a*(1)	52
Protection of	63	52
Underground	54	42
Cable sheath, grounding of	12	10
Calcium chloride, soil treatment	35*b*	28
Carbon blocks:		
Cleaning	66	56
Open-space cut-out	57*b*	43

	Paragraph	Page
Carbon protective devices	66	56
Carrier ground-return circuits	40	32
Carrier ground-return circuits, loss of	40*b*	32
Carrier system ground-return circuits	40*a*	32
Carrier telegraph equipment:		
Replacement of protectors with protected drainage	62	52
Carrier telephone system:		
Ground arrangements	39	31
Central office:		
Protector unit	58*d*	47
Sneak currents	58*d*	47
Chemical treatment:		
Soil	36	29
Grounds discharging direct current	37	31
Choice of location, grounds	9	10
Cinder-filled roadbed, grounds	51*a*	40
Circuit noise	2*a*	1
Circuits:		
Aerial, potentials	54	42
Communication, wire, potentials	54	42
Emergency, for carrier system	40*a*	32
Ground, metallic-return	52	40
Ground-return	40	32
Ground-return, carrier, loss of	40*b*	32
Signal, wire, potentials	54	42
Teletypewriter, leakage of	38	31
Classification of soil for resistance	33*b*	27
Clay-filled roadbed, grounds	51*a*	40
Coaxial cable, radio stations, protection of	64*b*(2)	54
Coaxial transmission line, radio stations	64*b*(2)	54
Coils:		
Heat	56*a*, 58*d*	43, 47
Heat, central office, mounting of	58*d*	47
Loading, protection of	65*b*	55
Two-winding, protection of carrier telegraph equipment	62	52
Commercial wire system, heat coils	58*d*	47
Common grounds	11	10
Commonly used protectors	56	43
Communication circuits:		
Potentials	54	42
Protective devices	54	42
Communication equipment:		
Radio, grounds, interference suppression	8	9
Telegraph, grounds	52	40
Telephone, emergency grounds	53	41
Teletypewriter, grounds	52	40
Composition of station protector	57*a*	43
Conditions of soil for good grounds	32	27
Conductance:		
Deep-driven rod	44*e*	34
Increase in, ground rod	44*b*	33
System of electrodes over given area of limited depth	44*d*	34
Conductive soil	51*a*	40

	Paragraph	Page
Conductivity:		
Soil, near electrode	2*b*	1
Wood mass	51*a*	40
Conductor, ground lead	8	9
Connections to ground	2*a*	1
Contact resistance	26	21
Copper sulphate, soil treatment	35*c*	28
Corrective maintenance, grounds	42	32
Corrosion of electrodes, chemical treatment	37	31
Covering of equipment:		
Motor generators, preventing equipment damage	58*c*	47
Motor generators, protection of personnel	58*c*	47
Protection of personnel	58*b*	47
Crossfire	3	2
Crosstalk	2*a*	1
Crosstalk, carrier ground-return circuits	40*a*	32
Current-limiting devices	57*a*	43
Current, sneak	66	56
Current, sneak, protection fuses	66	56
Cut-outs, open-space	56*a*, 57*b*	43
Average operating voltage	57*b*	43
Grounding of	57*b*	43
Damage:		
Lead-covered long-distance cables by lightning	63*b*	53
Protective apparatus	56	43
Danger of potentials	25	20
Dead stump, ground rod driven in	51*b*	40
Decrease in resistance, soil treatment	36*d*	29
Deep-driven rod, conductance of	44*e*	34
Depth:		
Buried bare wire	10	10
Differences in resistivity of soil	5*e*	7
Grounds	19, 21, 27	15, 16, 21
Variation in, resistivity of soil	5*b*	5
Devices, protective:		
Basic maintenance	41	32
Carbon	66	56
Communication circuits	54	42
Exposed wires to terminal or teletypewriter station	57*a*	43
Extent required	55	42
Line fuses	57*c*	46
Maintenance of	66	56
Nullification of	56*b*	43
Part of switchboard equipment	59*a*	49
Power fuses	57*d*	47
Separate mountings for cable protection	63*a*(2)	53
Separate mountings for communication circuits	54	42
Separate mountings for switchboard equipment	59*b*	49
Types of	56*a*	43
Direct current, chemical treatment of grounds discharging	37	31
Direct measurement of ground resistance	43	33
Drainage, protector:		
Where required	62	52

	Paragraph	Page
Drainage, protector—*Continued*		
Packaged telephone-line transmission equipment	62	52
Portable carrier telegraph line transmission equipment	62	52
Drainage, protective	62	52
Driven rods	2*a*	1
Driving ground rods, method of	13, 19, 20	11, 15
Earth resistance, specific	2*b*	1
Effective ground:		
Junction of open wire with field wire	63*c*	54
Junction of open wire with spiral-four cable	63*c*	54
Effect of wet weather on certain circuits	38	31
Effective earth shell, increased	50	39
Effective ground shell	49	39
Effectiveness of chemical treatment of soil	36*d*	29
Effectiveness of soil treatment	36	29
Electrical resistance of soil around electrode	34	28
Electrode system, limited size	5*c*	6
Electrodes:		
Auxiliary	47	38
Conductivity of soil near	2*b*	1
Corrosion because of chemical treatment	37	31
Cylindrical, earth's path from	44*a*	33
Ground, used with salt treatment	5*e*	7
Material	29	23
Near roots of tree	51*a*	40
Permanent ground connection	5*a*	5
Reduction in resistance, soil treatment	36	29
Resistance	2*c*	2
System, choice of	44*e*	34
System of, over given area of limited depth	44*d*	34
Emergency circuit for carrier system	40*a*	32
Emergency grounds	53	41
Equipment grounds	2*a*	1
Equipment inserted in open-wire lines, protection of	65*b*	55
Equipment, separate grounds for	11	10
Excessive potentials between cable conductors, avoiding of	63*a*	52
Exposed wires to terminal or teletypewriter station; protective devices	57*a*	43
Extensive electrode system, laying out of	44*f*	34
Fall of potential method, measuring ground resistance	45*b*	34
Field tests, determining location of ground	48	39
Fixed telephones, typical protectors	60*b*	50
Fixed radio stations, protection of	64*b*	54
Fusestats	57*d*	47
Fusestats, adapters	57*d*	47
Fuses	56*a*	43
Fuses:		
Fixed telephone, provision for	60*b*	50
Line	57*c*, 66	46, 55
Open, discovery of	66	56
Power, mounting of	57*d*	47
Power, plug or cartridge type	57*d*	47

	Paragraph	Page
Fuses—*Continued*		
Sneak current	66	56
Switchboard, omitting of	59*b*	49
Fusetrons	56*a*, 57*d*	43, 47
Gaps, protective	66	56
Gaps, protective, for antenna support at radio station	64*b*(2)	54
Ground connections	2*a*	1
Ground connections:		
Application	8	9
Low-resistance	7	9
Multipurpose	8	9
Permanent	5*a*	4
Requirements	6	8
Grounding of—		
Lead-cable sheath	12	10
Openspace cut-outs	57*b*	43
Ground lead, protective grounding	8	9
Ground ohmer, measuring ground resistance	46*b*	37
Groundometer, measuring ground resistance	46*c*	37
Ground resistance measurements:		
Bridge	46*d*	38
Conclusions	44	33
Direct	43	33
Ground ohmer	46*b*	37
Groundometer	46*c*	37
Megger ground tester	46*a*	35
Ratio method	45*c*	37
Test Set I–48–B	46	35
Test Set I–49	46	35
Triangulation method	45*a*	34
Ground resistance measuring	45	34
Ground resistance measuring devices	46	35
Ground-return circuit:		
Carrier, loss of	40*b*	32
Carrier system	40*a*	32
Telegraph equipment	52	40
Teletypewriter equipment	52	40
Ground rods:		
Brook bed	51*d*	40
Corrosion because of chemical treatment	37	31
Dead stump	51*b*	40
Driving, method of	13, 19, 20	11, 15
Extension of	13	11
Increase in conductance	44*b*	33
Roadbed	51*c*	40
Roadbed, advantage of	51*c*	40
Tree base	51*a*	40
Types of	30	24
Grounds	2*a*	1
Grounds:		
Bare wire with varied cable	63*c*	54
Basic maintenance	41	32
Bayonets	53	41
Buried bare wire	10	10

	Paragraph	Page
Grounds—*Continued*		
Buried wire	2*a*	1
Buried water system	2*a*	1
Cinder-filled roadbed	51*a*	40
Clay-filled roadbed	51*a*	40
Common	11	10
Corrective maintenance	42	32
Discharging direct current, chemical treatment of	37	31
Electrode system, choice of	44*e*	34
Emergency	53	41
Equipment	2*a*	1
Good, soil conditions for	32	27
Group of equipments	8	9
High-resistance	3	2
Inconsistent results	51*a*	40
Increase in conductance	44*b*	33
Interconnected	11	10
Junction of open wire with field wire	63*c*	54
Junction of open wire with spiral-four cable	63*c*	54
Lightning arrestor	9	10
Lightning protection	8	9
Location, choice of	9	10
Maintenance, basic	41	32
Maintenance, corrective	42	32
Mechanical construction	13	11
Poor	3	2
Pipe systems	2*a*	1
Radio interference suppression	8	9
Reduction of resistance	51*d*	40
Relay protector	9	10
Separate equipment	11	10
Spacing of	24	19
Telegraph equipment	52	40
Teletypewriter equipment	52	40
Telephone communication equipment, emergency	53	41
Temporary, low-resistance	51*a*	40
Tree stump, wet	51*b*	40
Varied results	51	40
Ground wire	2*e*	
Heat coils	56*a*, 56*d*	43
Commercial wire systems	58*d*	47
Equipment protection	58*d*	47
Mounting central office	58*d*	47
High-resistance grounds	3	2
High resistivity of treated soil	5*c*	6
Impedance, suddenly applied voltages	58*d*	47
Inconsistent results, grounds	51*a*	40
Increased effective earth shell	50	39
Increase in conductance, ground rod	44*b*	33
Induction, power line	2*a*	1
Insertion of protection equipment in open-wire line	65*b*	55
Interconnected grounds	11	10
Interference suppression of radio equipment, grounds	8	9

	Paragraph	Page
Laying out extensive electrode system	44*f*	34
Lead-covered cable at aerial wire junction, protection of	63*a*	52
Lead-covered cable, protection against lightning	63*a*	52
Lead-covered long-distant cable, protection	63*b*	53
Leakage of teletypewriter circuits, wet weather conditions	38	31
Lightning	2*a*	1
Arrestors	57*a*	43
Effects, underground cable	54	42
False operation of carrier telegraph equipment	62	52
Operation of protectors by	62	52
Potentials	54	42
Protection	8	9
Protection against	54	42
Line fuses, protective devices	57*c*, 66	46, 56
Location of grounds:		
Choice of	9	10
Determining, field tests	48	39
Long-distant lead-covered cable, protection of	63*b*	53
Loss of carrier ground-return circuits	40*b*	32
Low-resistance ground, temporary	51*a*	40
Magnesium sulphate, soil treatment	35*d*	28
Maintenance:		
Grounds	41, 42	32
Protective devices	41, 66	32, 56
Measuring ground resistance	45	34
Bridge	46*d*	38
Conclusions	44	33
Direct	43	33
Ground ohmer	46*b*	37
Groundometer	46*c*	37
Megger ground tester	46*a*	35
Ratio method	45*c*	35
Test Set I–48–B	46	35
Test Set I–49	46	35
Triangulation method	45*a*	34
Mechanical construction, grounds	13	11
Metallic objects, miscellaneous, grounds	53	41
Method of—		
Driving ground rods	13, 19, 20	11, 15
Treating ground rods	36	29
Minimum resistance	4	3
Moisture content:		
Brook bed ground	51*d*	40
Soil	5	3
Soil, effect of	32, 34	27, 28
Motor generators:		
Covering of, to prevent equipment damage	58*c*	47
Covering of, protection of personnel	58*c*	47
Mounting heat coils, central office	58*d*	47
Mountings:		
Multiple, for protector blocks	59*b*	49
Separate, for commercial circuits	54	42
Separate, for switchboard equipment	59*b*	49

	Paragraph	Page
Multipurpose ground connections	8	9
Nullification of protective devices	56*b*	43
Ohmer, ground, measuring ground resistance	46*b*	37
Omitting switchboard fuses	59*b*	49
Open-space cut-outs	56*a*, 57*b*	43
Average operating voltage	57*b*	43
Grounding of	57*b*	43
Open-wire lines, protection of equipment inserted in	65*b*	55
Open wire with field wire, junction of, grounds	63*c*	54
Open wire with spiral-four cable, junction of, grounds	63*c*	54
Operation, range of	3	2
Operation of protectors by lightning	62	52
Outside protectors, telephone	60*b*	50
Packaged telephone-line transmission equipment, protector drainage	62	52
Panels, equipment, protection of personnel	58*b*	47
Permanent ground connection	5*a*	4
Personnel, protection of	58	47
Polarized ground connection, resistance of	51*a*	40
Poles, protection of	65*a*	55
Portable carrier telephone line transmission equipment, protector drainage	62	52
Portable radio equipment, protection of	64*a*	54
Portable telephones, protection of	60*a*	50
Potassium nitrate, soil treatment	35*e*	28
Potentials:		
Aerial circuits	54	42
Cause of	25	20
Communication circuits	54	42
Danger of	25	20
Excessive, between cable conductors, avoiding of	63*a*	52
Lightning	54	42
Surges from power lines	54	42
Wire communication and signal circuits	54	42
Power line surges, potentials	54	42
Protected drainage, replacement of protectors with, carrier telegraph equipment	62	52
Protection:		
Coaxial transmission line, radio stations	64*b*(2)	54
Equipment inserted in open-wire lines	65*b*	55
Equipment, heat coils	58*d*	47
Exchanges	57*a*	43
Fixed radio stations	64*b*	54
Fixed telephones	60*b*	50
Fuses, against sneak current	66	56
Junction of open wire with field wire	63*c*	54
Junction of open wire with spiral-four cable	63*c*	54
Lead-covered cables against lightning	63*a*	52
Lead-covered cable at aerial-wire junctions	63*a*	52
Lead-covered long-distant cable	63*b*	53
Lightning	8, 54	9, 42
Loading coils	65*b*	55

	Paragraph	Page
Protection—*Continued*		
Personnel	58*c*	47
Poles	65*a*	55
Radio stations	63*c*	54
Radio stations, fixed	64*b*	54
Reasons for	57*a*	43
Special application of	65	54
Switchboard	59*b*	49
Switchboard equipment	59	49
Switching central	57*a*	43
Tactical switchboards	59*a*	49
Telephones, fixed	60*b*	50
Telephones, portable	60*a*	50
Two-winding coils, carrier telegraph equipment	62	52
Protective apparatus, damage of	57*c*	46
Protective devices:		
Basic maintenance	41	32
Carbon	66	56
Commonly used	56	43
Communication circuits	54	42
Damage of	57*c*	46
Exposed wires to terminal or teletypewriter station	57*a*	43
Extent required	55	42
Line fuses	57*c*, 66	46, 56
Location of, switchboard and telephone	61	51
Maintenance of	66	56
Nullification of	56	43
Operation of, by lightning	62	52
Outside, telephone	60*b*	50
Part of switchboard equipment	59*a*	49
Power fuses	57*d*	47
Separate mountings for cable protection	63*a*(2)	53
Separate mountings for communication circuits	54	42
Separate mountings for switchboard equipment	59*b*	49
Station, composition of	57*a*	43
Types of	56*a*	43
Protective drainage	62	52
Protective gaps	66	56
Protector blocks:		
Switchboard, use of	59*b*	49
Wires connected to same terminal	63*a*(1)	52
Protector drainage:		
Packaged telephone-line transmission equipment	62	52
Portable carrier telegraph line transmission equipment	62	52
Where required	62	52
Protectors	66	56
Provisions for fuses, fixed telephone	60*b*	50
Radio equipment:		
Antenna supports, protector gaps for	64*b*(2)	54
Fixed, protection of	64*b*	54
Grounds, interference suppression	8	9
Portable, protection of	64*a*	54
Requirements for ground connections	6	8
Wooden poles, protection against shattering	64*b*(2)	54

	Paragraph	Page
Radio stations:		
Coaxial transmission line	64*b*(2)	54
Protective gaps for	64*b*(2)	54
Protection at	63*c*	54
Protection, bonding of coaxial cable	64*b*(2)	54
Resistance	2*c*	2
Contact	26	21
Electrical, of soil around electrode	34	28
Electrode	2*c*	2
Factors affecting	33	27
Ground	2*b*	1
Ground, direct measurement of	43	33
Ground, high	3	2
Ground, measuring devices for	46	35
Ground, reduction of	2*b*	1
Ground-return circuit	2*b*	1
Ground wire	2*e*	2
High, ground in brook bed	51*d*	40
Low, ground rod in moist dead stump	51*b*	40
Minimum	4	3
Polarized ground connection	51*a*	40
Reduction of	51*d*	40
Reduction in, soil treatment around electrode	36	29
Seasonal	5*a*	4
Soil classification	33*b*	27
Soil strata	33*a*	27
Soil tests for	33*c*	28
Specific, earth	2*b*	1
Variance	2*d*	2
Variation in, treatment of soil	5*e*	7
Resistivity of soil:		
Differences in, with depth	5*e*	7
Effect of moisture	34	28
Effect of moisture content	5	3
Effect of salt content	5*d*	7
Effect of temperature	5*a*	4
Extreme variation in	5*b*	5
High, soil treated	5*c*	6
Rise in, at temperatures below freezing	5*e*	7
Temperature effect, soil treated	5*e*	7
Treated	5*d*	7
Variation in	5	3
Variation in, in same vicinity	5*b*	5
Variation in, with depth	5*b*	5
Roadbed, cinder or clay fill, ground	51*a*	40
Rods:		
Ground	2*b*	1
Ground, method of driving	13, 19, 20	11, 15
Ground, method of treating	36	29
Driven	2*a*	1
Salt content of soil, effect of, resistivity	5*d*	7
Separate mountings of protective devices:		
Cable protection	63*a*(2)	53

	Paragraph	Page
Separate mountings of protective devices—*Continued*		
Communication circuits	54	42
Switchboard equipment	59*b*	49
Shattering of wooden poles, radio equipment, protection against	64*b*(2)	54
Sheath, cable, grounding of	12	10
Signal circuits, potentials	54	42
Sneak currents:		
Central offices	58*d*	47
Fuses	66	56
Sodium chloride, soil treatment	35*a*	28
Soil:		
Artificial treatment of	35	28
Change in salt content	5*e*	7
Chemical treatment of	36	29
Classification of, resistance	33*b*	27
Conditions for good ground	32	27
Conductive	51*a*	40
Conductivity of, near electrode	2*b*	1
Electrical resistance of, around electrode	34	28
Factors affecting resistance of	33	27
Moisture content of	5	3
Moisture content of, effect	32, 34	27, 28
Resistance, types of soil	32	27
Resistivity of	5	3
Strata, resistance of	33*a*	27
Temperature	5*a*	4
Tests for resistance	33*c*	28
Treated, high resistivity	5*c*	6
Treatment of	36	29
Treatment of, reduction of resistivity of electrode	36	29
Soil treatment:		
Artificial	35	28
Calcium chloride	35*b*	28
Chemical	36	29
Copper sulphate	35*c*	28
Decrease in resistance	36*d*	29
Even distribution of	36*d*	29
Magnesium sulphate	35*d*	28
Potassium nitrate	35*e*	28
Sodium chloride	35*a*	28
Special protection, application of	65	55
Specific earth resistance	2*b*	1
Spikes, ground	53	41
Spiral-four cable, grounds at junction of open wire with	63*c*	54
Station equipment, protection of	57	43
Station protector, composition of	57*a*	43
Substances for treating soil	35	28
Supports, antenna at radio station, protector gaps for	64*b*(2)	54
Suppression of interference, radio, grounds for	8	9
Switchboards:		
Location of protectors for	61	51
Protection of	59	49
Separate mounting of protective devices	59*b*	49
Tactical, protection of	59*a*	49

	Paragraph	Page
Tactical switchboards, protection of	59*a*	49
Telegraph equipment, grounds	52	40
Telephones:		
Fixed, protection of	60*b*	50
Grounds	53	41
Location of protectors for	61	51
Portable, protection of	60*a*	50
Teletypewriter equipment, grounds	52	40
Test Set I–48–B, measuring ground resistance	46	35
Test Set I–49, measuring ground resistance	46	35
Tree stump, wet, ground	51*b*	40
Triangulation method, measuring ground resistance	45*a*	34
Variation in resistance:		
Earth's path from cylindrical electrode	44*a*	33
Grounds	43	33
Voltage, average operating, open-space cut-outs	57*b*	43
Wire, bare, for grounding varied cable	63*c*	52
Wire, buried, grounds	2*a*	1
Wire communications and signal circuits, potentials	54	42
Wooden poles, radio station, protection against shattering	64*b*(2)	54

☆ U. S. GOVERNMENT PRINTING OFFICE: 1945—628027—TM-45